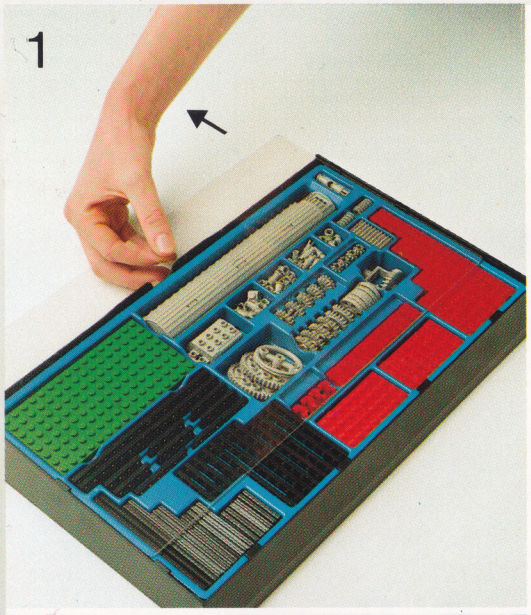

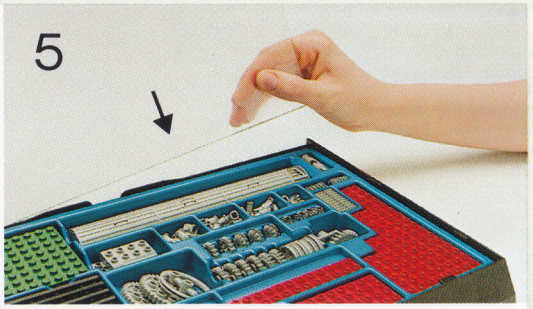

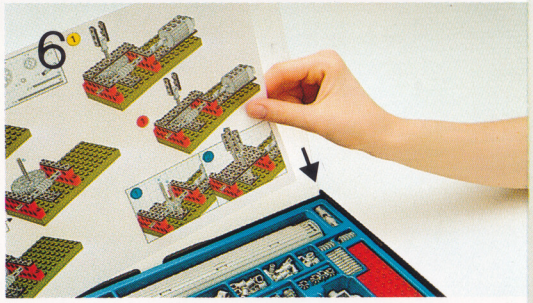

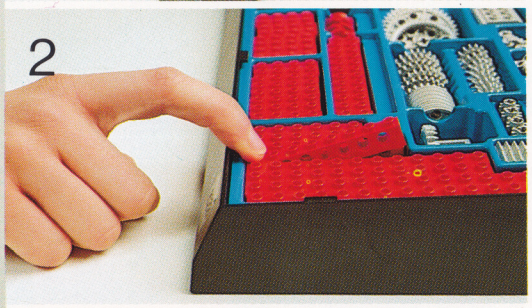

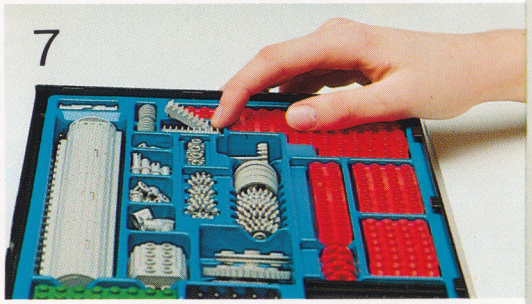

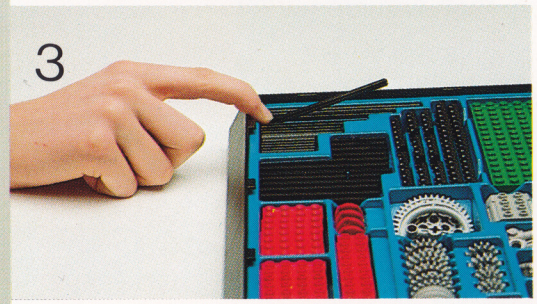

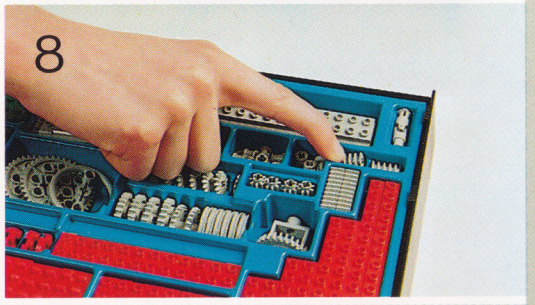

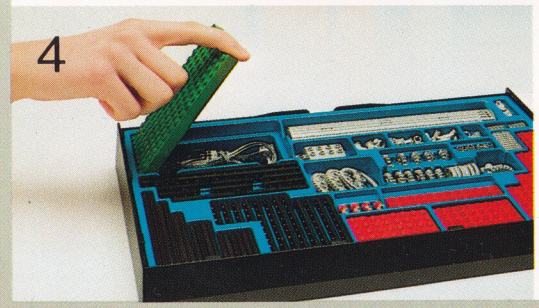

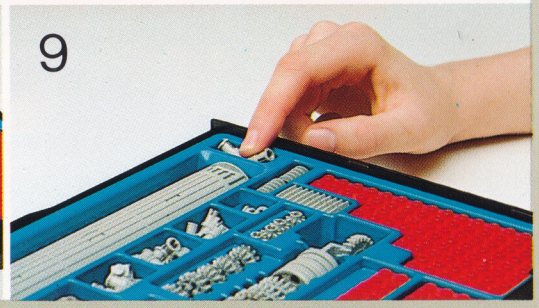

® LEGO and the LEGO Logo are registered trademarks. © 1985, 1990 LEGO Group.

PRINTED IN DENMARK BY LAURSEN-TØNDER

1033

1

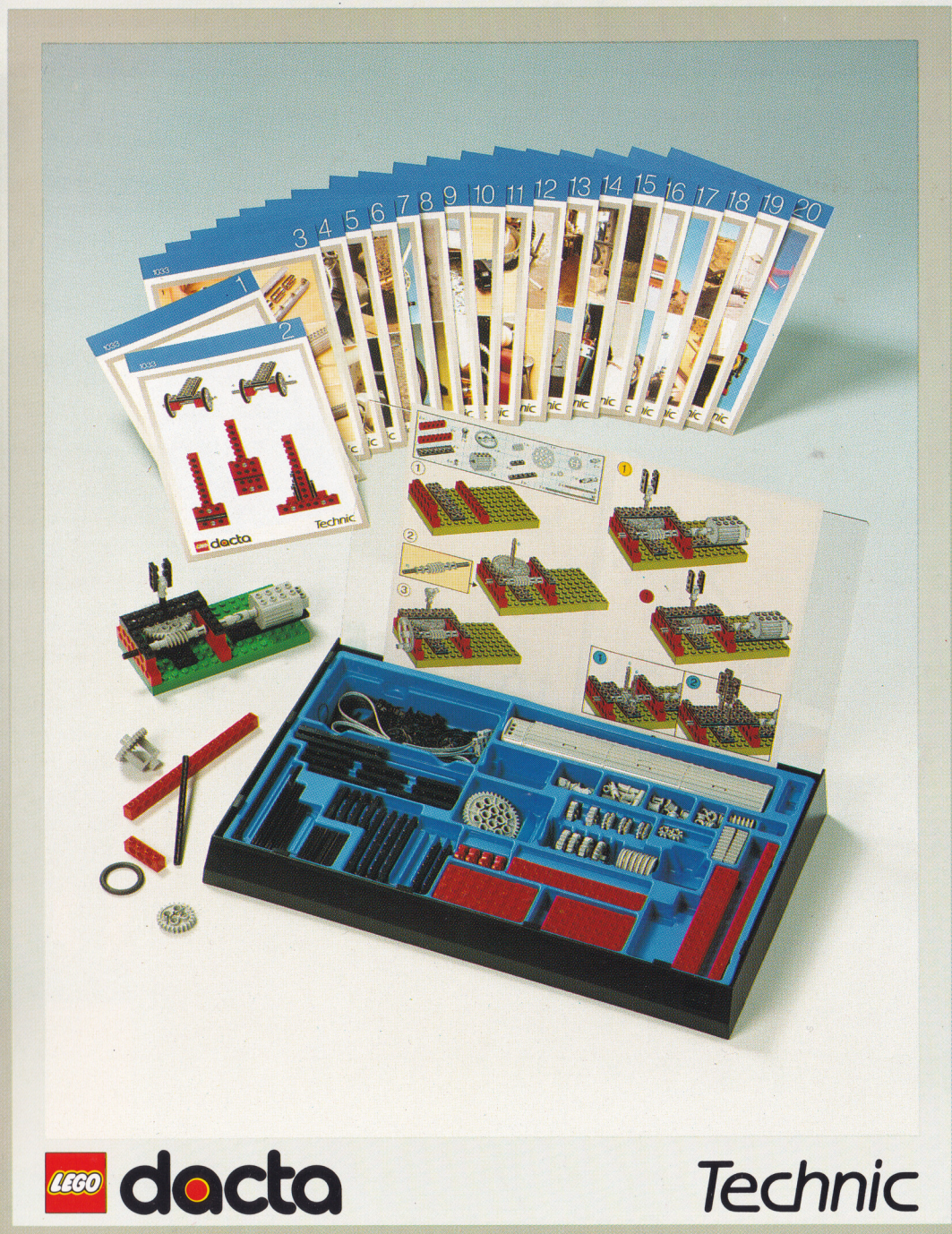

LEGO dacta

Technic

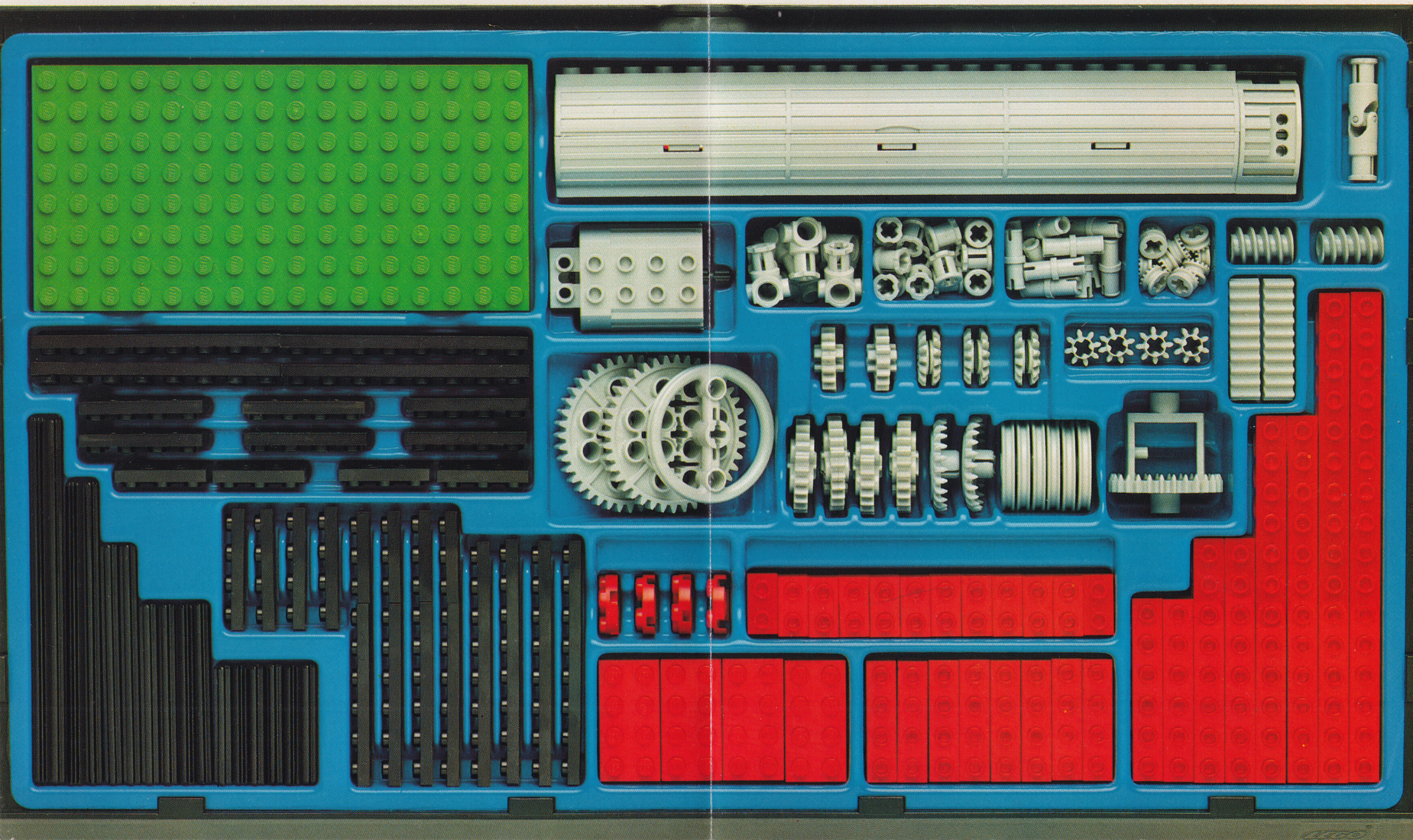

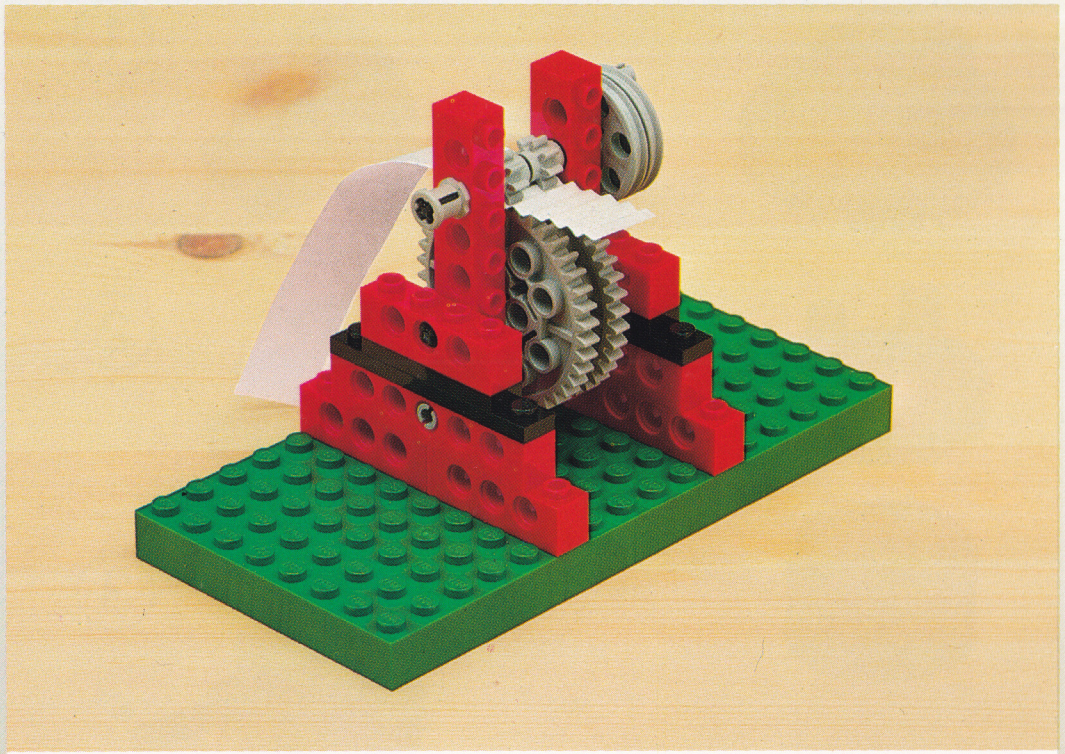

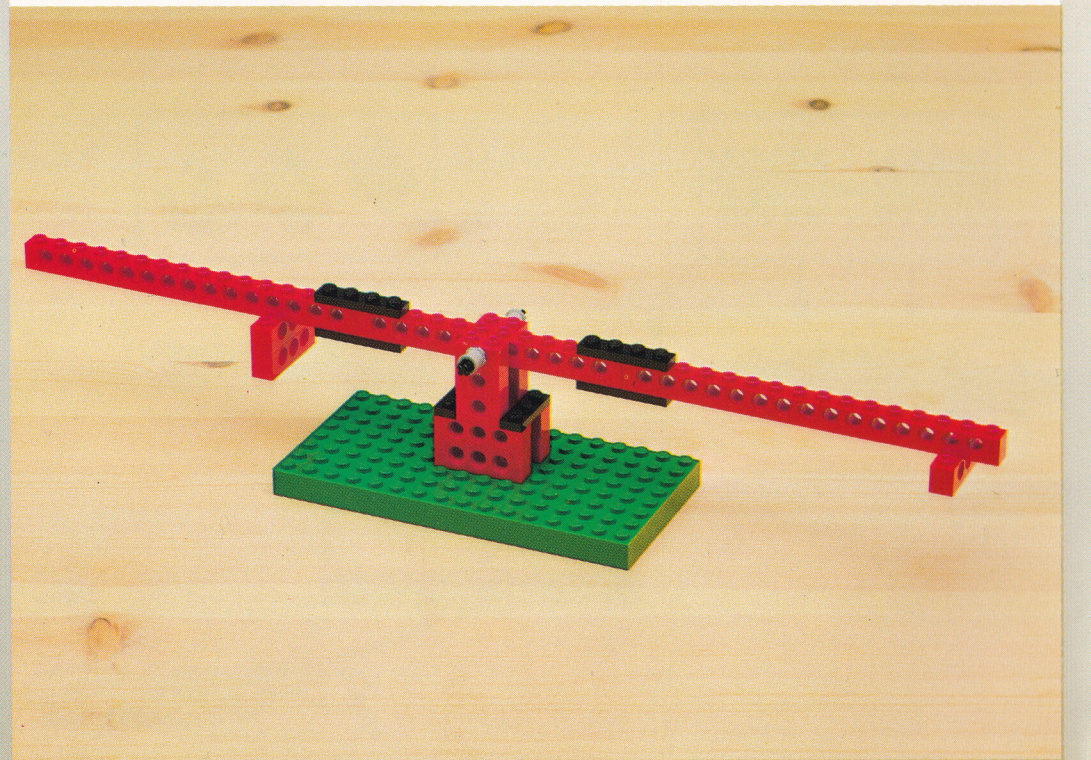

® LEGO and the LEGO Logo are registered trademarks. © 1985, 1990 LEGO Group.

PRINTED IN DENMARK BY LAURSEN·TØNDER

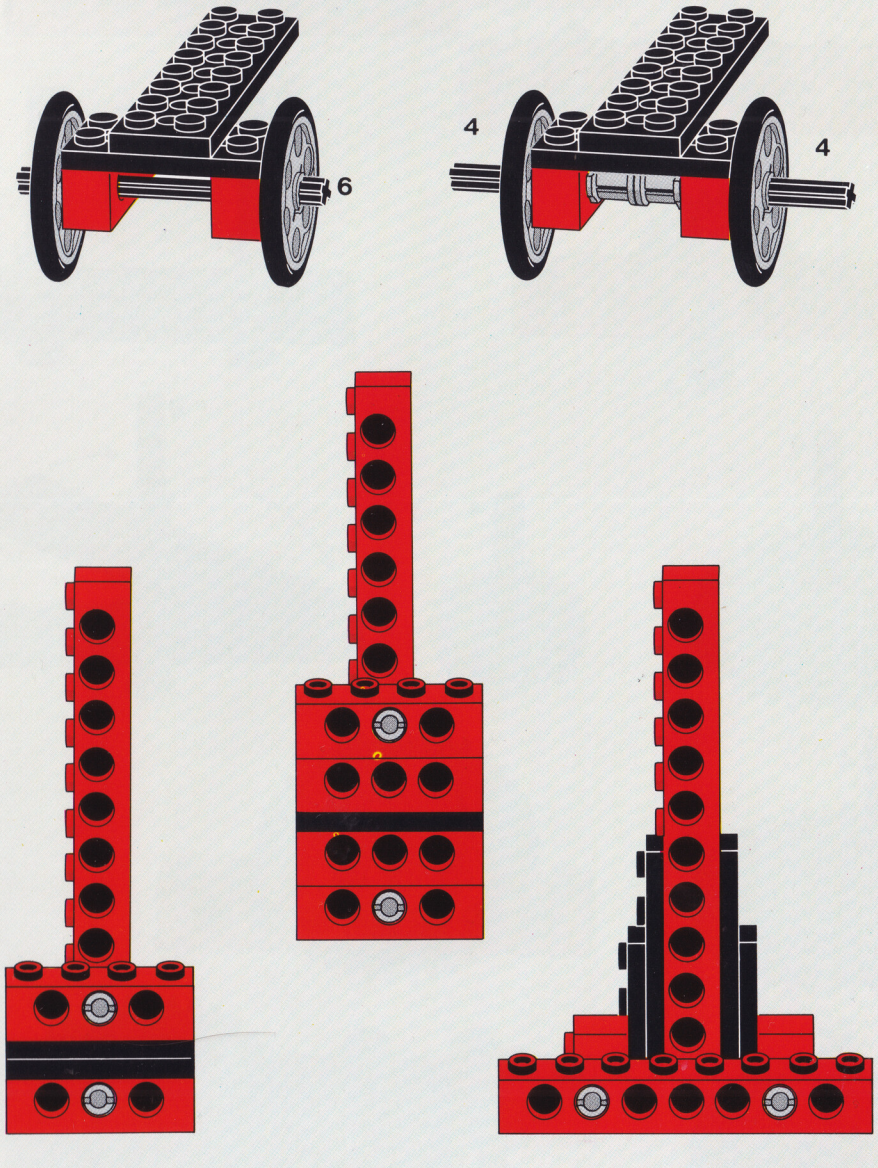

LEGO dacta Technic

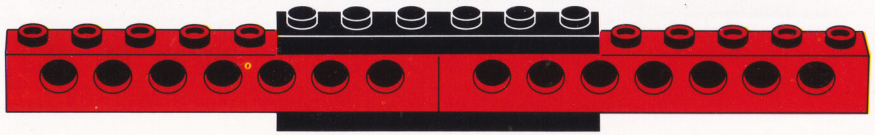

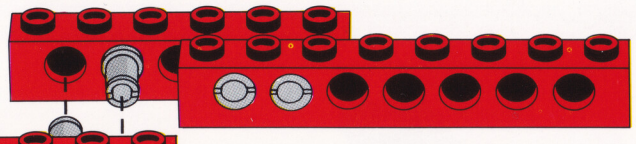

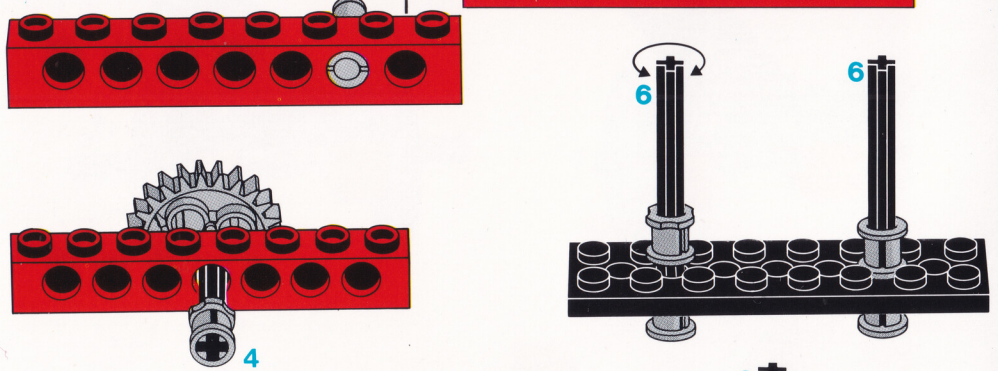

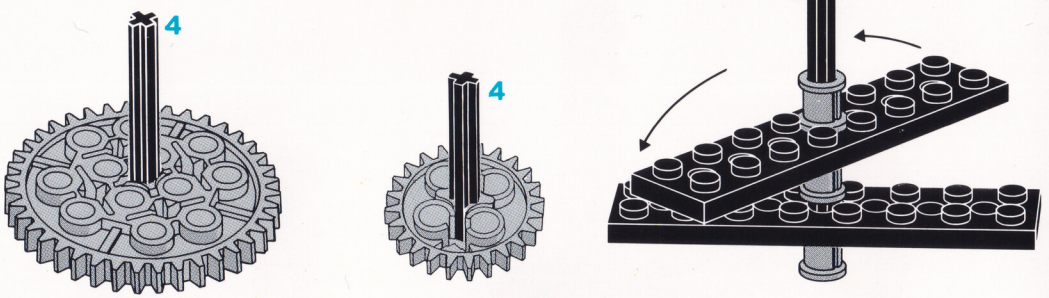

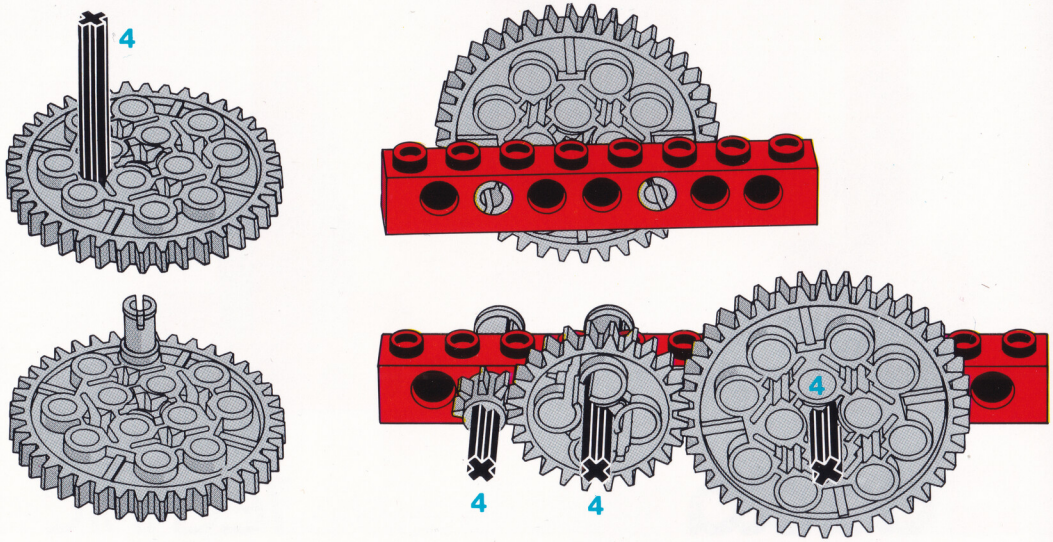

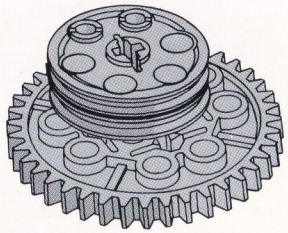

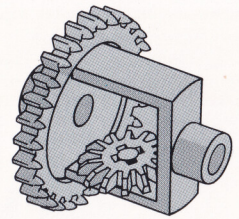

1

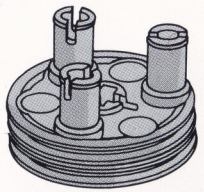

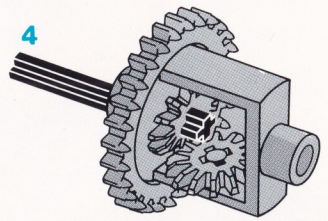

2

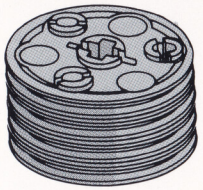

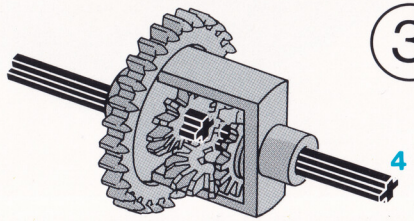

3

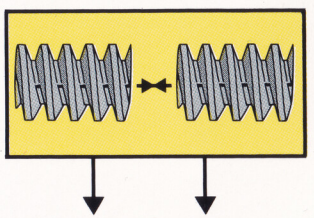

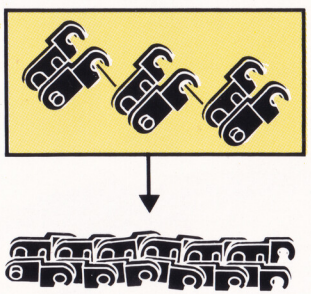

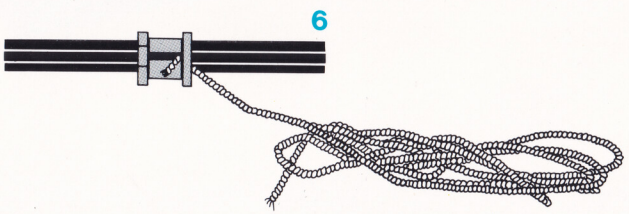

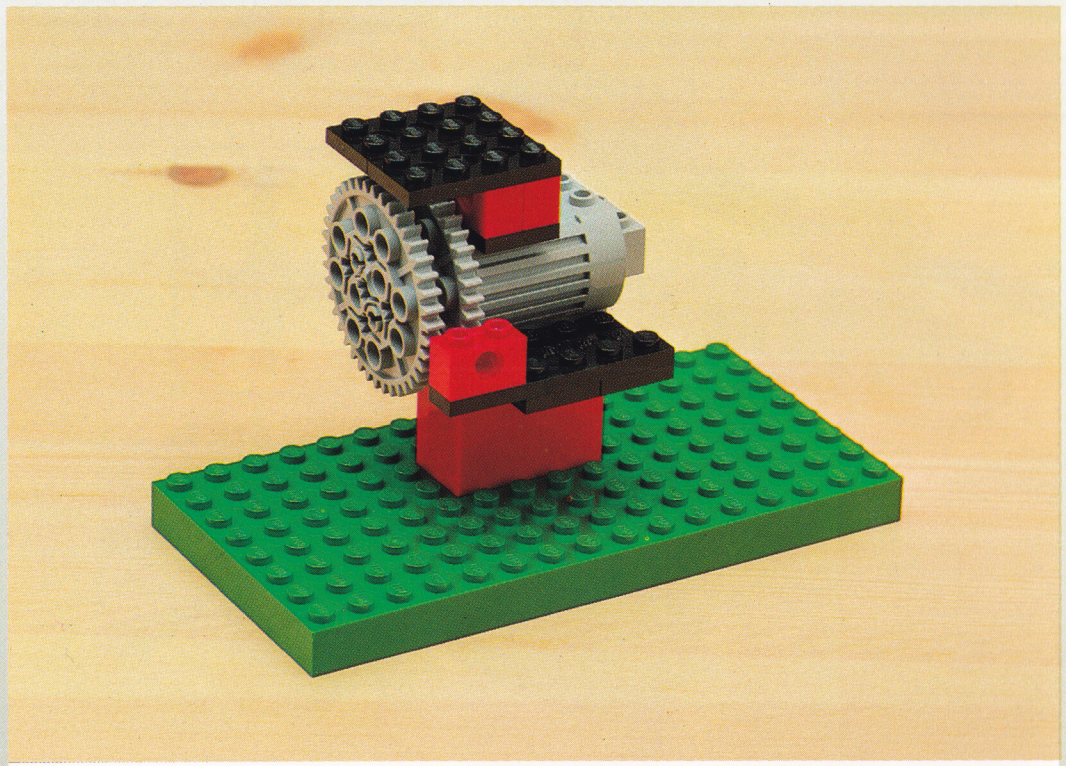

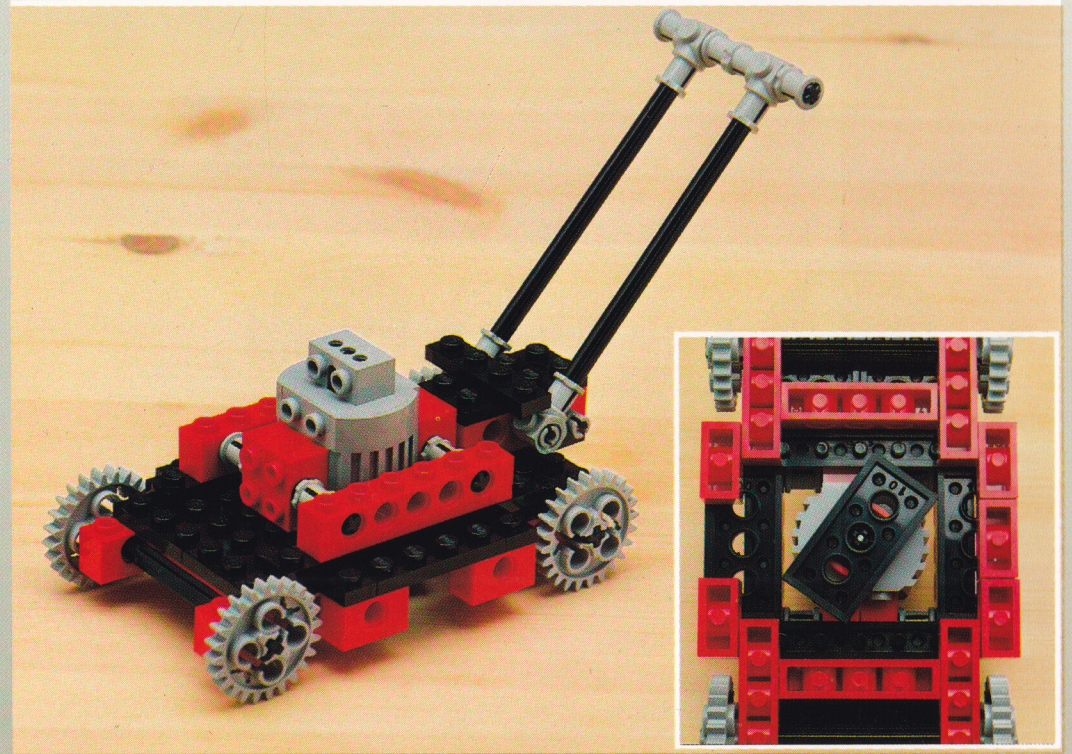

® LEGO and the LEGO Logo are registered trademarks. © 1985, 1990 LEGO Group.

PRINTED IN DENMARK BY LAURSEN-TØNDER

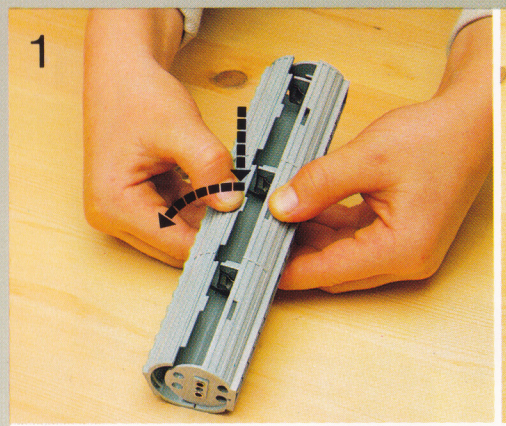

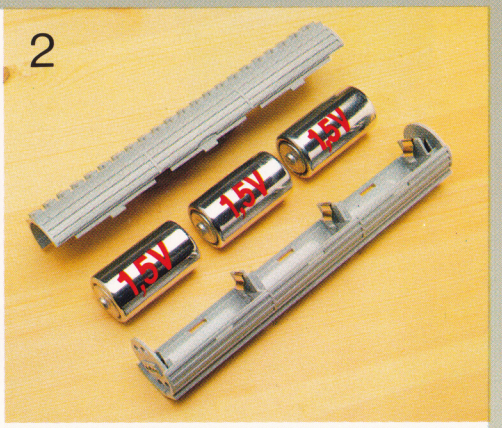

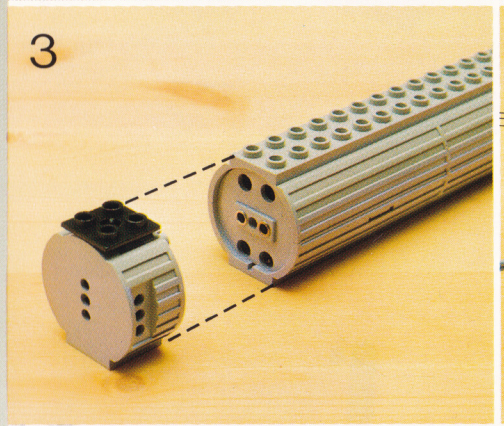

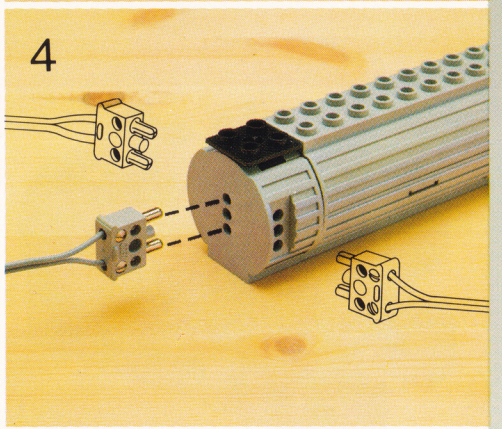

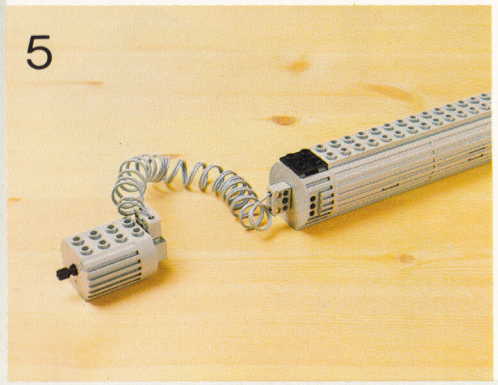

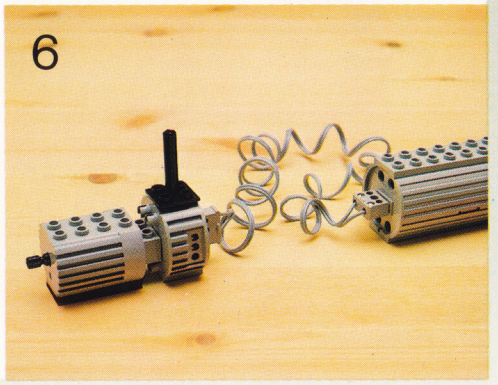

LEGO dacta Technic

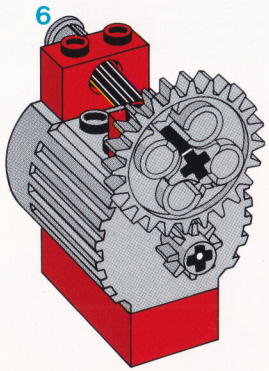

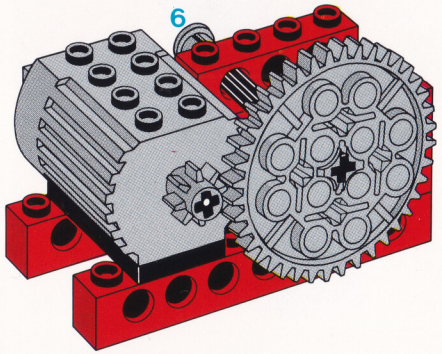

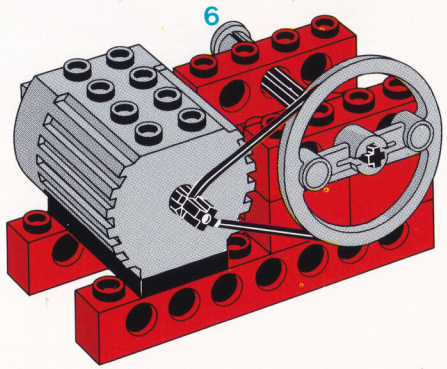

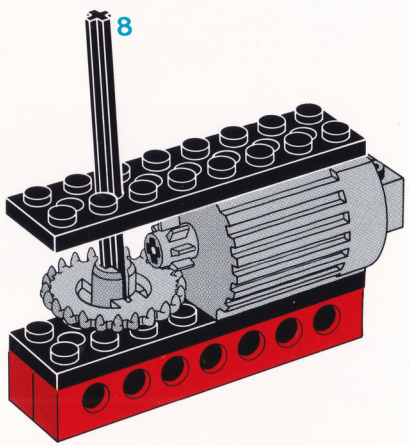

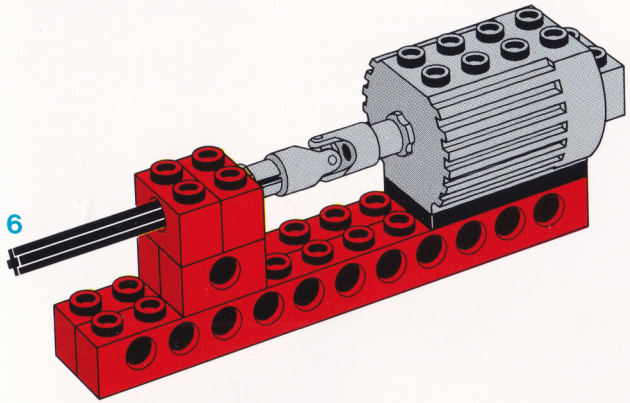

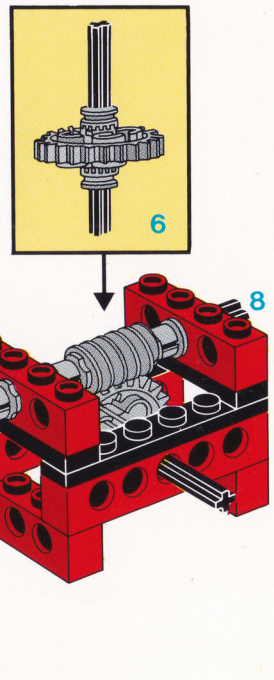

1

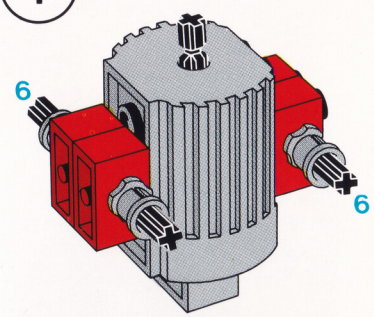

2

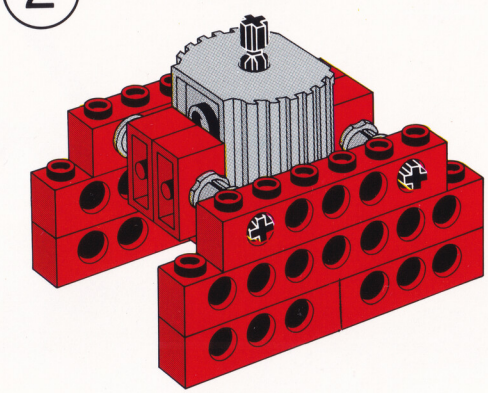

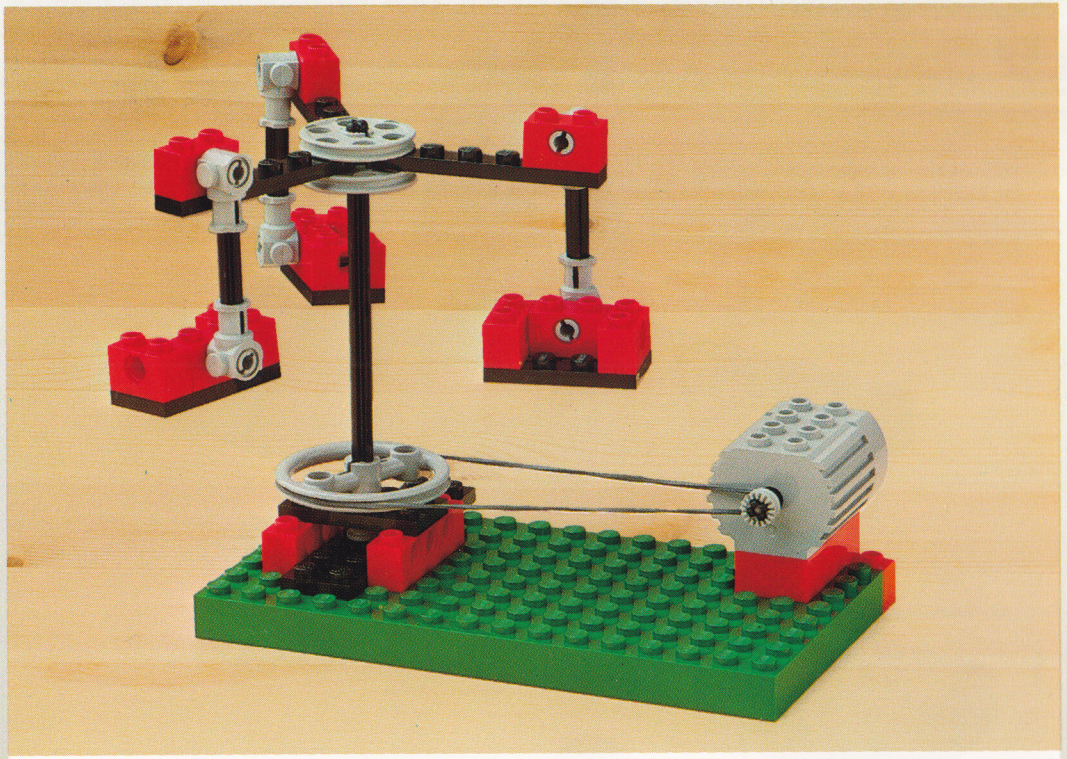

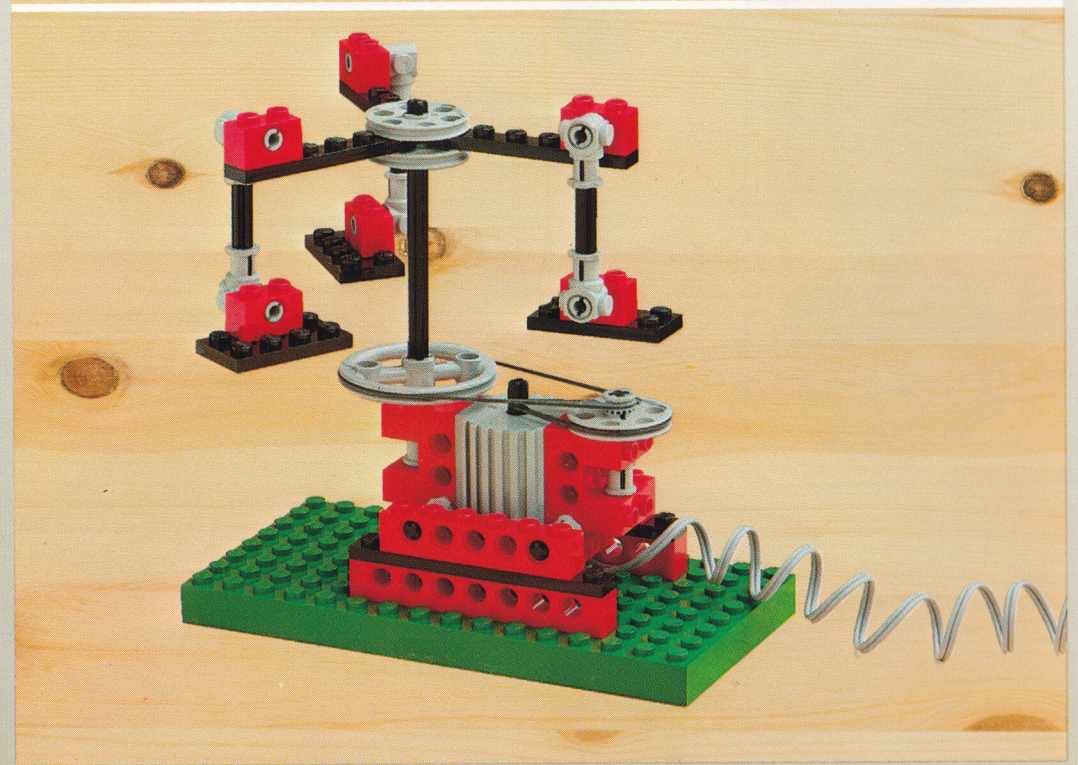

® LEGO and the LEGO Logo are registered trademarks. © 1985, 1990 LEGO Group.

PRINTED IN DENMARK BY ⊦ LAURSEN TØNDER



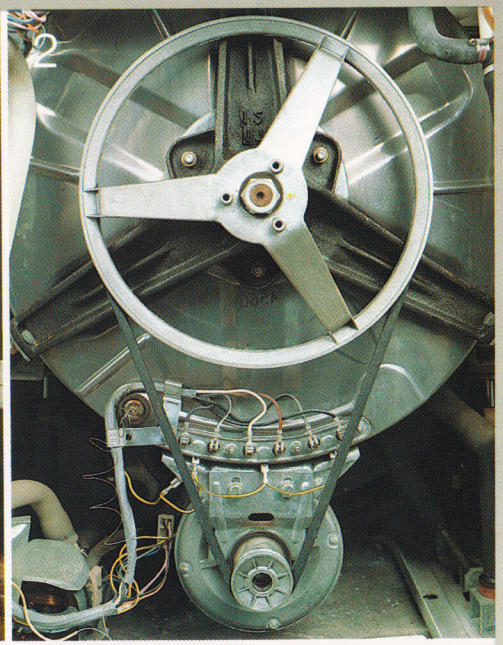



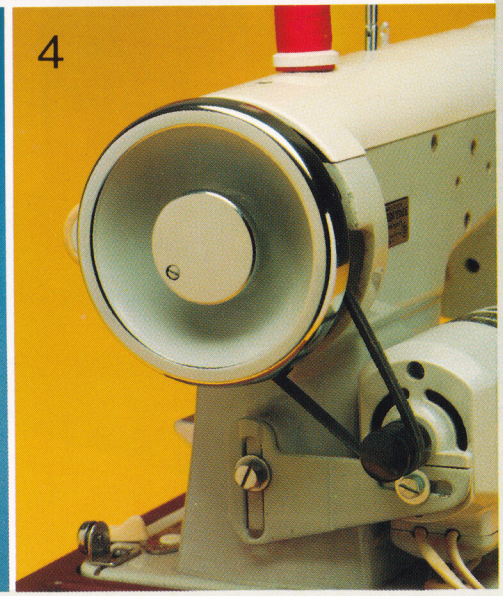

LEGO dacta

Technic

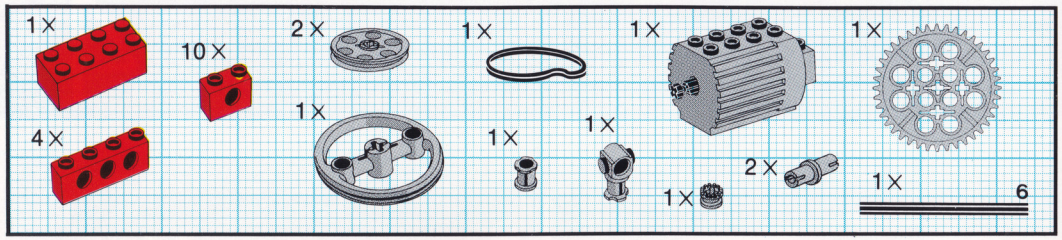
1X
10X
2X
1X
1X
1X
4X
1X
1X
1X
2X
1X
6

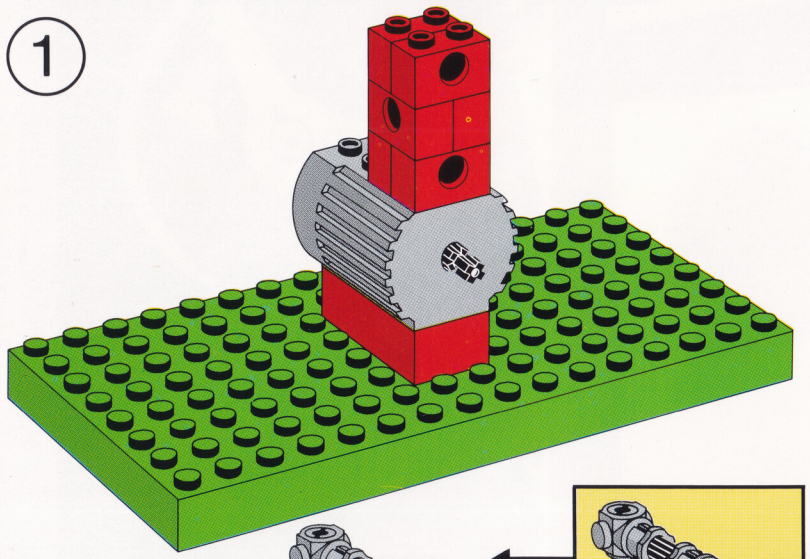
1

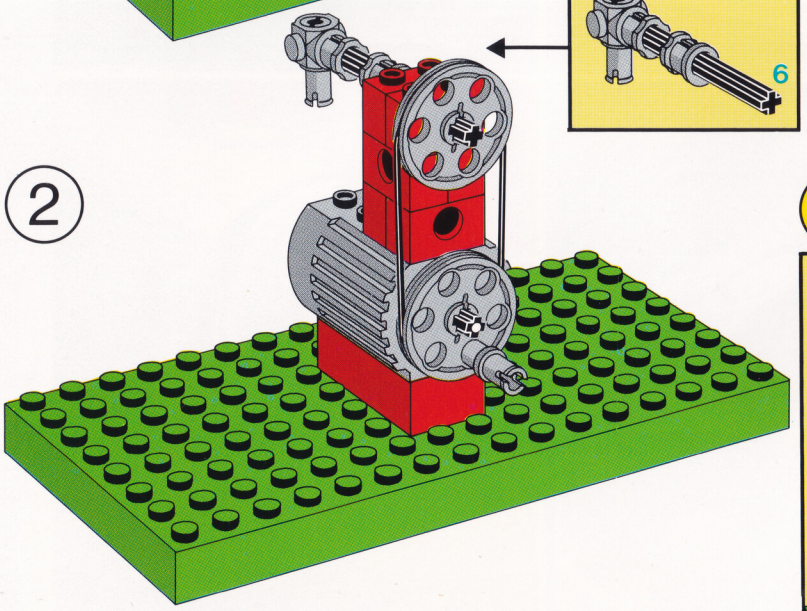
6
2

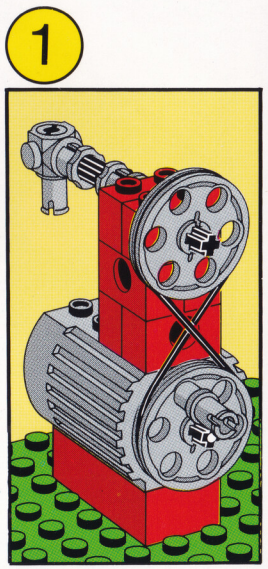
1

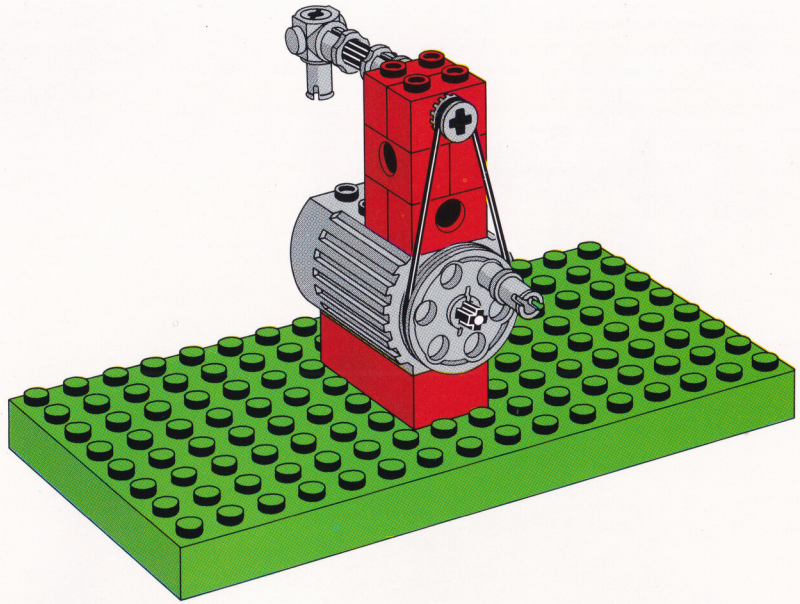
1

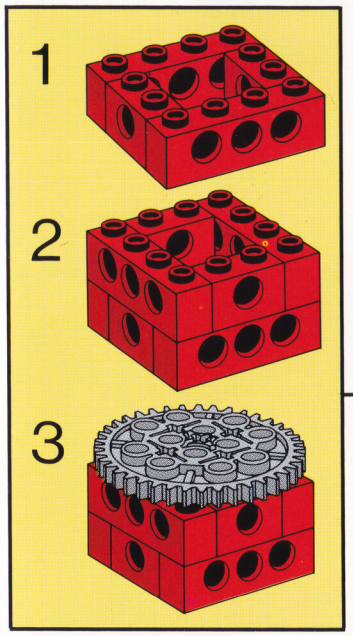
1
2
3

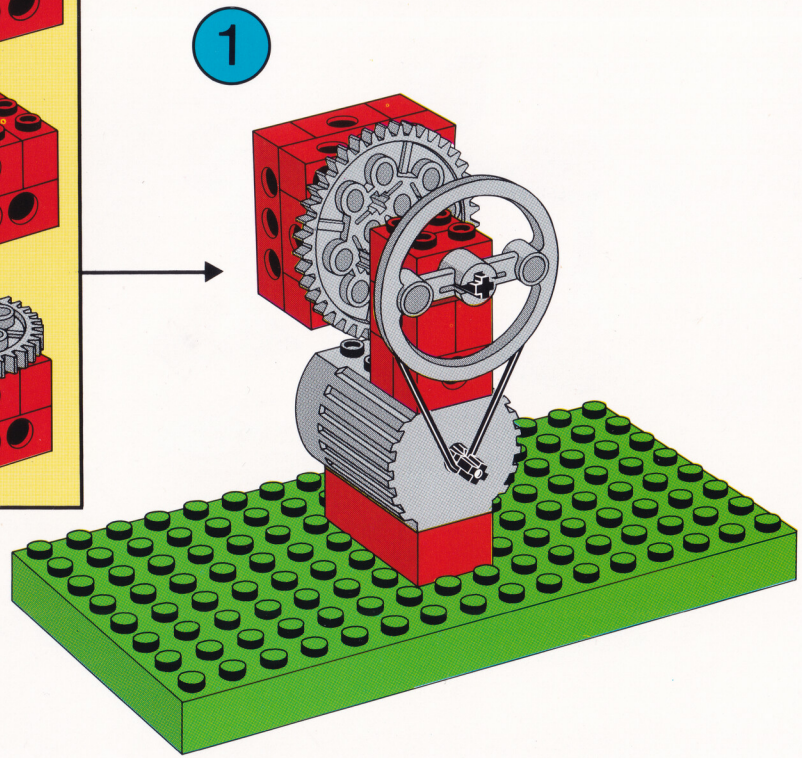
1

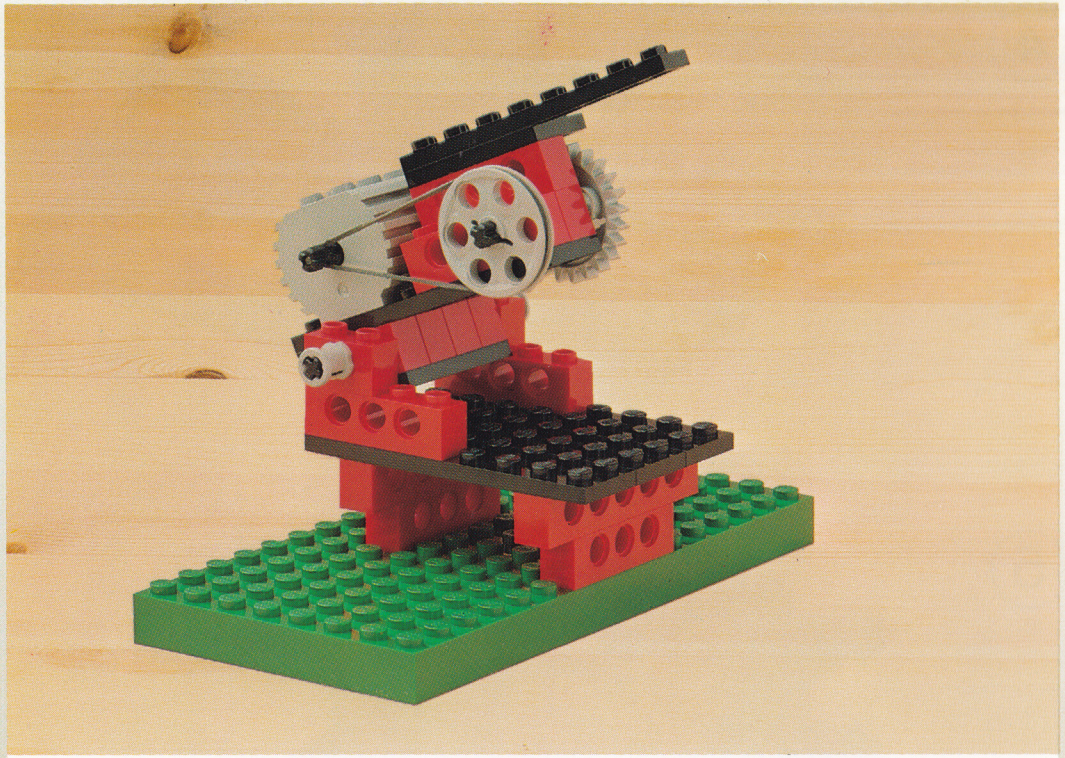

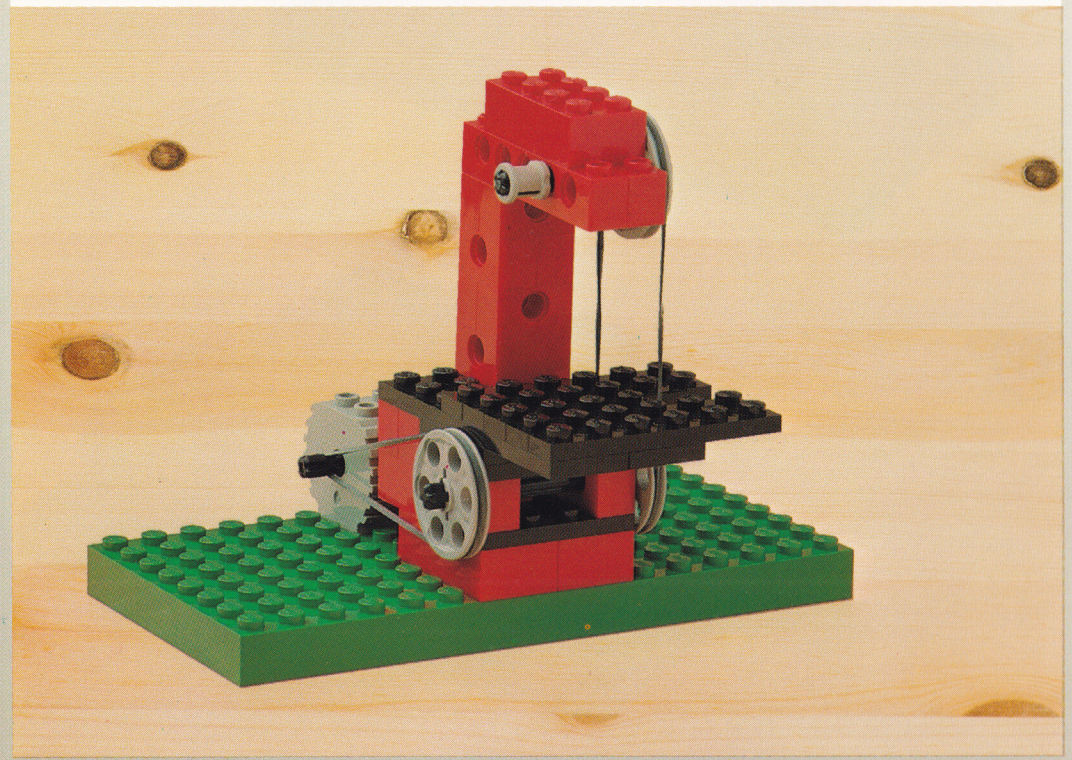

® LEGO and the LEGO Logo are registered trademarks. © 1985, 1990 LEGO Group.

PRINTED IN DENMARK BY LAURSEN TØNDER



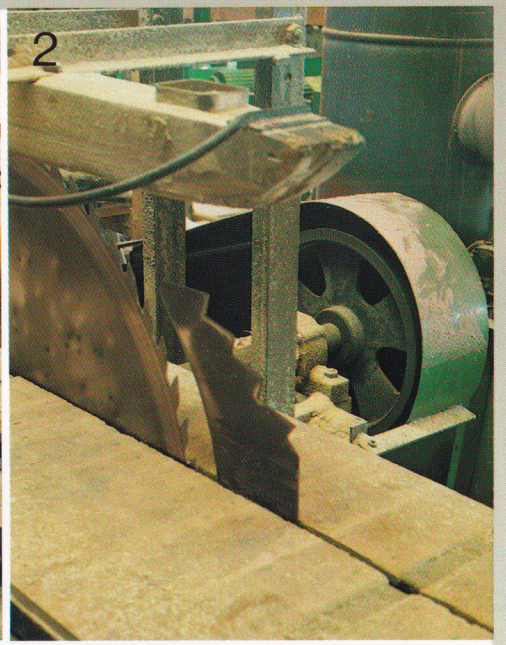

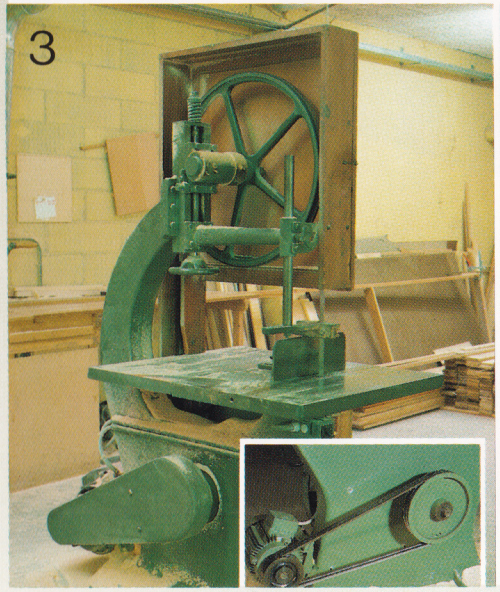

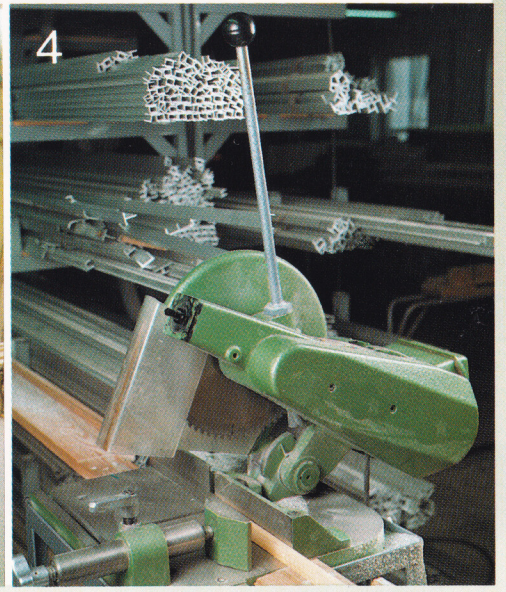

LEGO dacta Technic

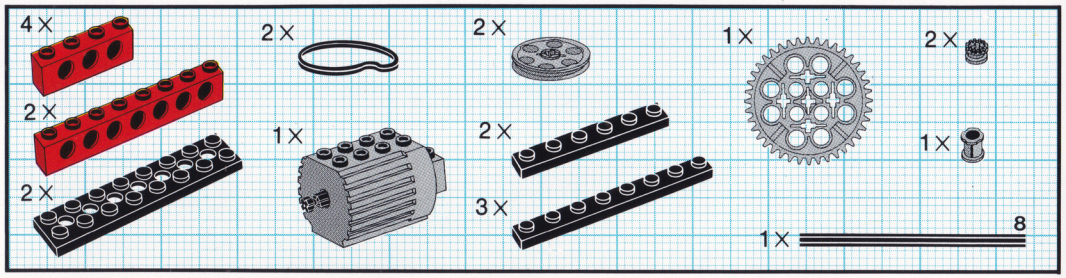

1

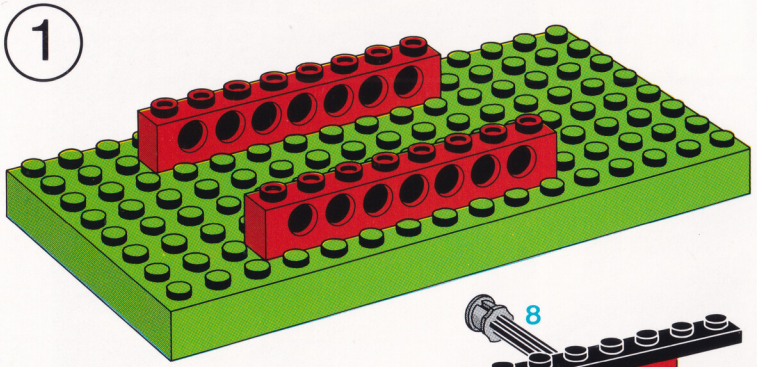

2

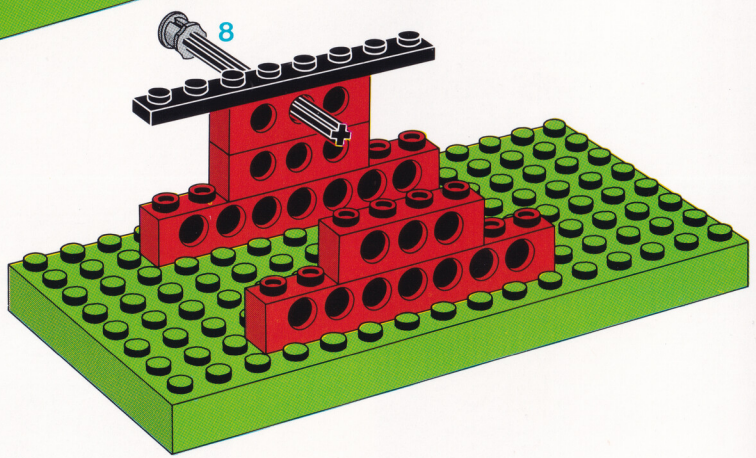

3

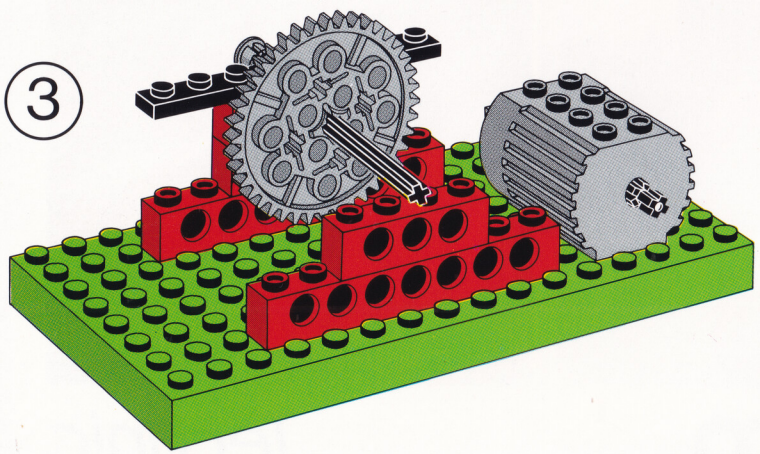

4

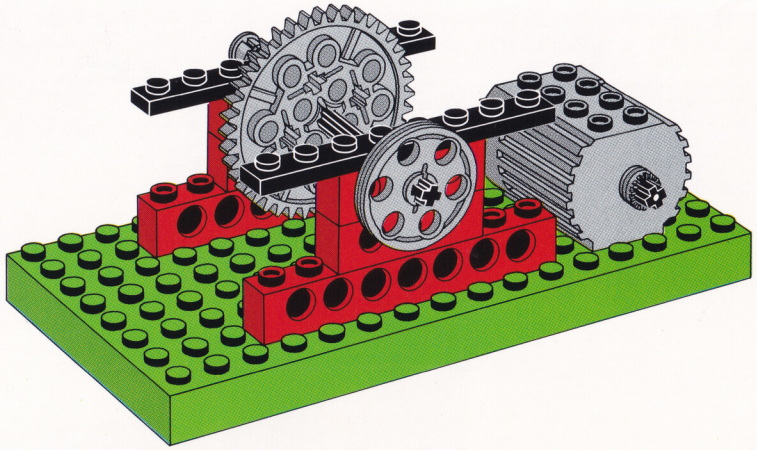

5

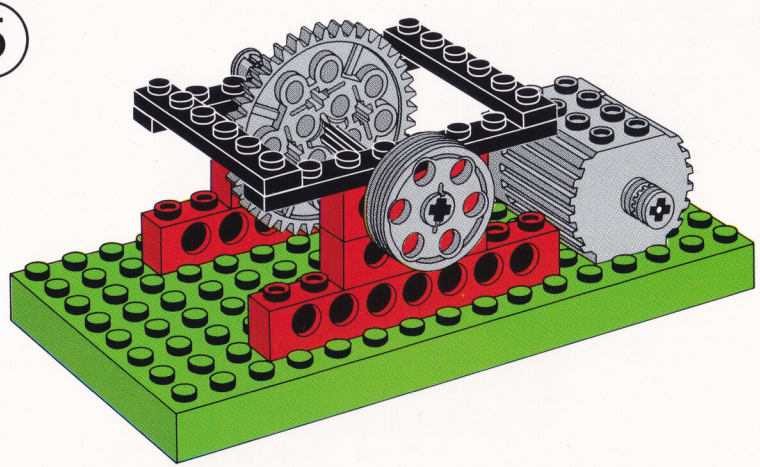

6

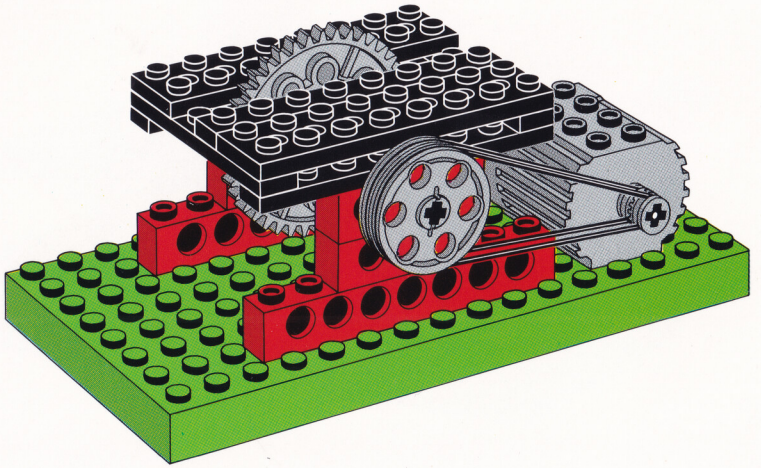

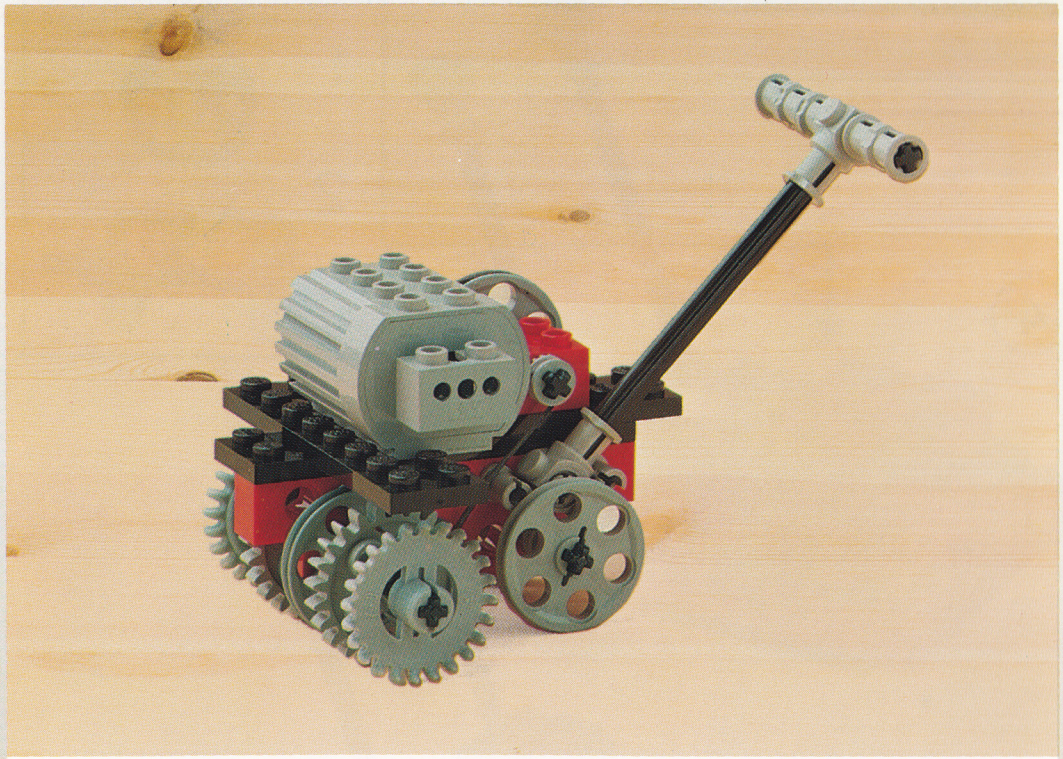

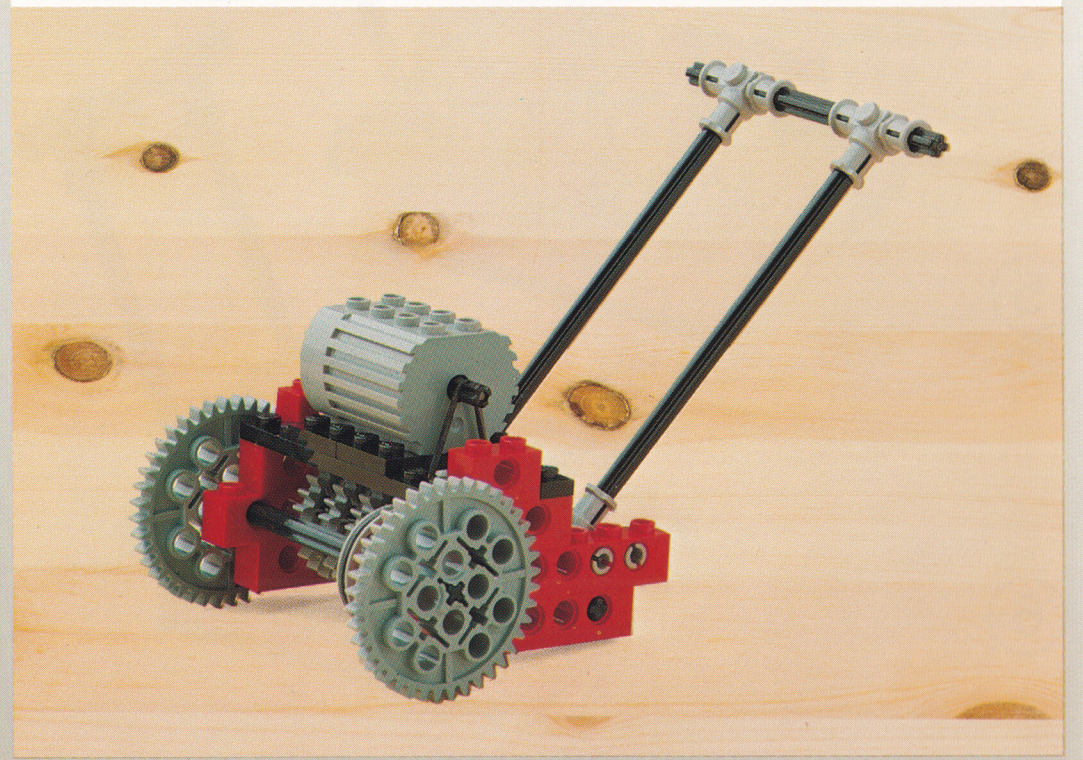

® LEGO and the LEGO Logo are registered trademarks. © 1985, 1990 LEGO Group.

PRINTED IN DENMARK BY LAURSEN-TØNDER





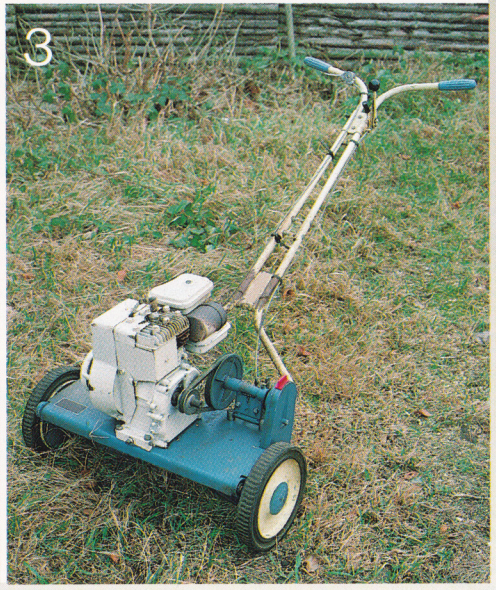

LEGO dacta Technic

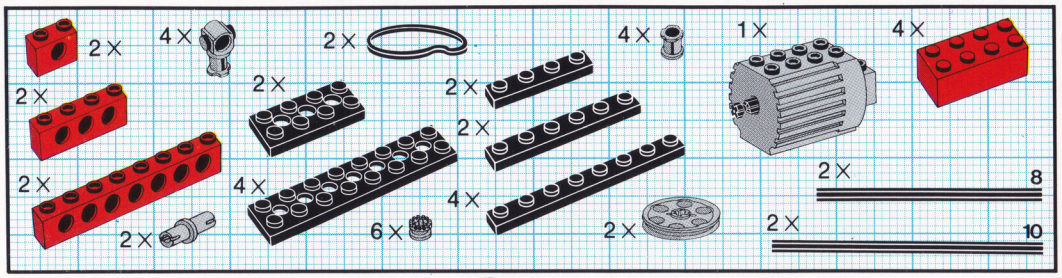
2 X
4 X
2 X
1 X
4 X
2 X
2 X
2 X
2 X
4 X
2 X
8
4 X
6 X
2 X
2 X
10

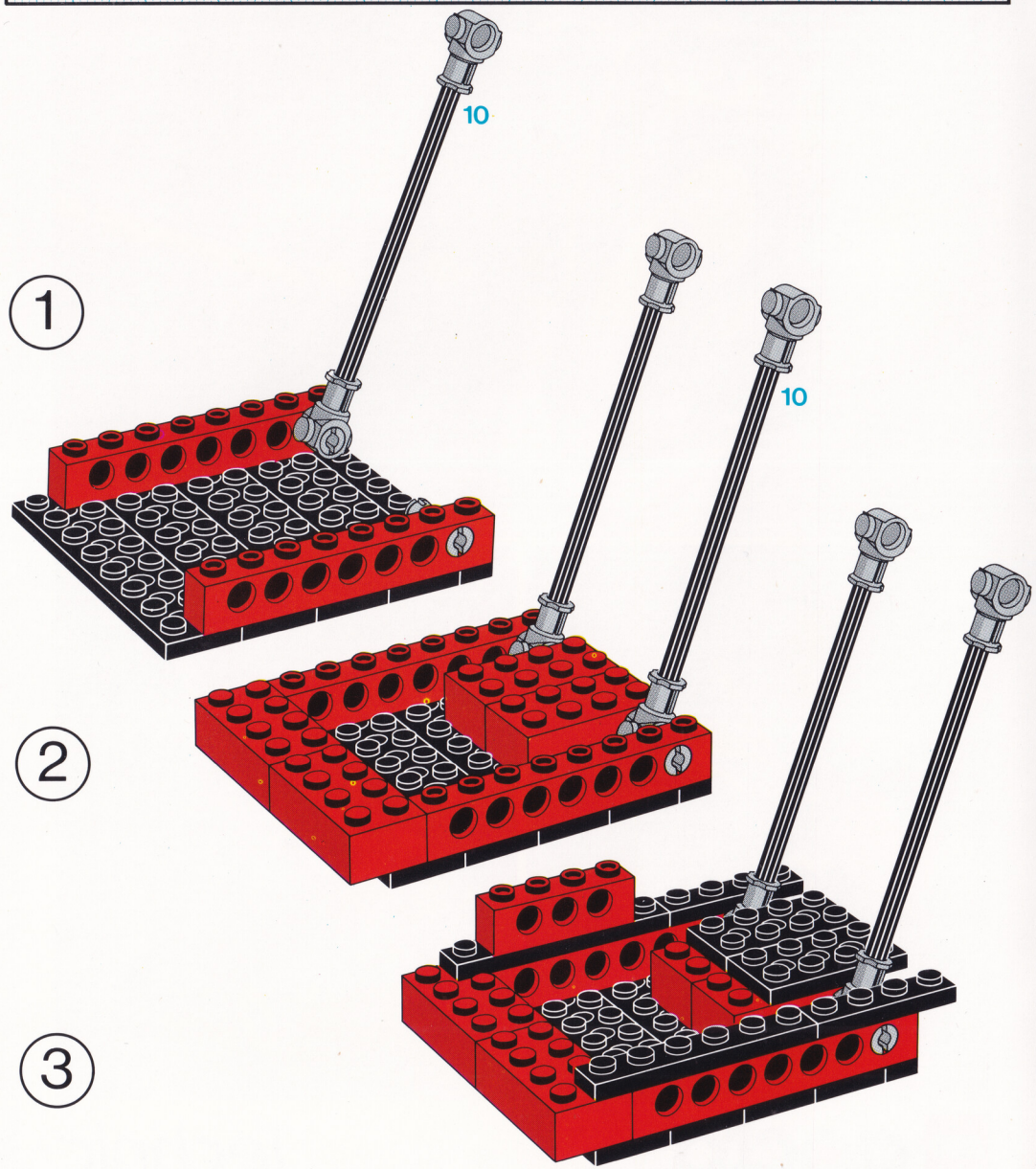
10
10
1
2
3

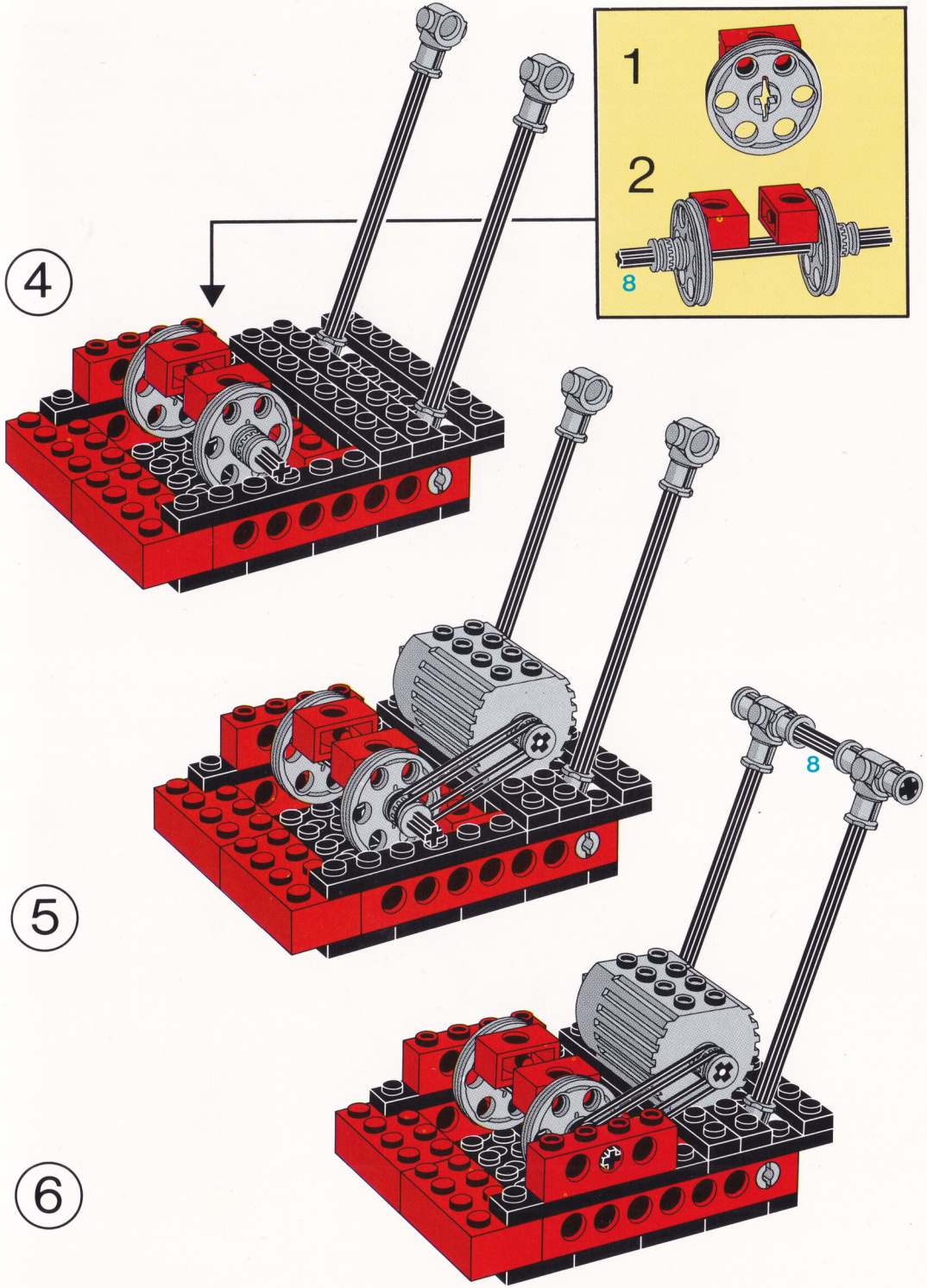
1
2
8
4
5
8
6

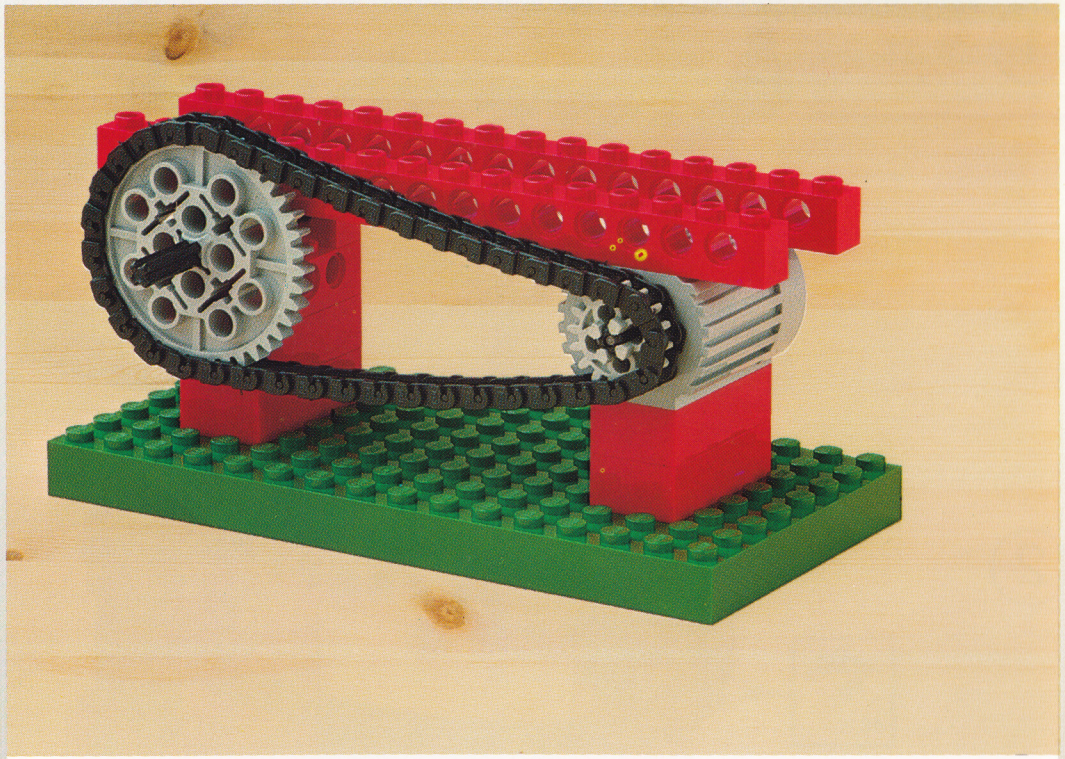

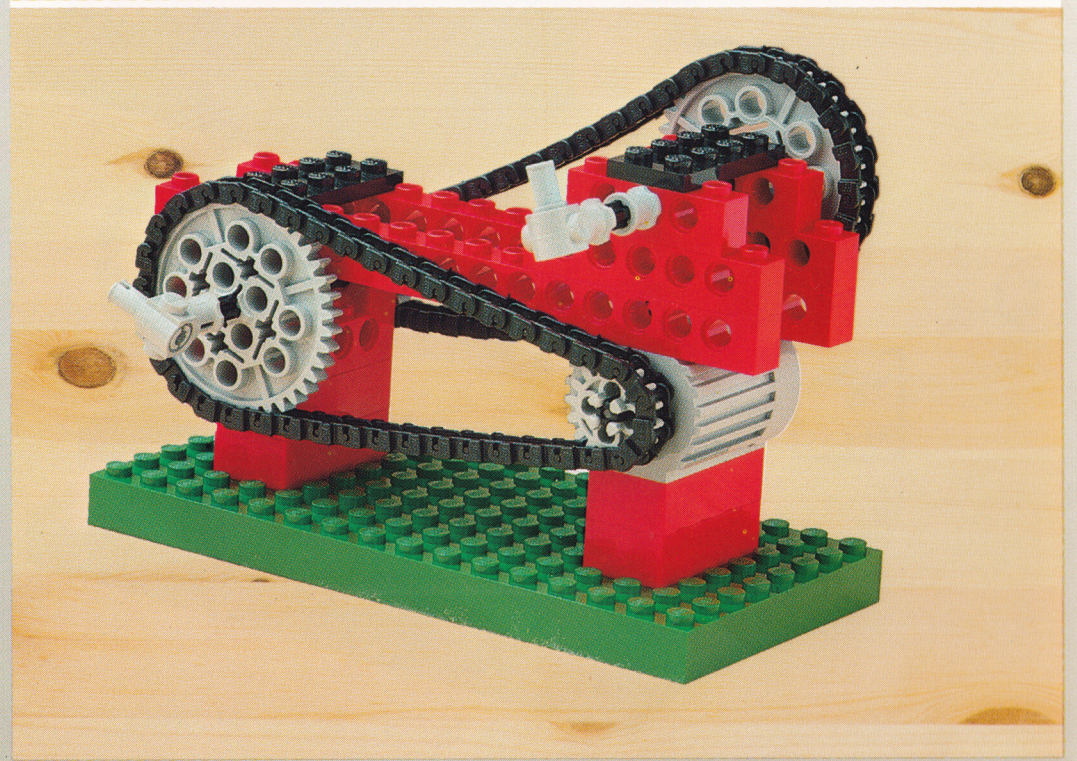

® LEGO and the LEGO Logo are registered trademarks. © 1985, 1990 LEGO Group.

PRINTED IN DENMARK BY LAURSEN TØNDER









LEGO dacta

Technic

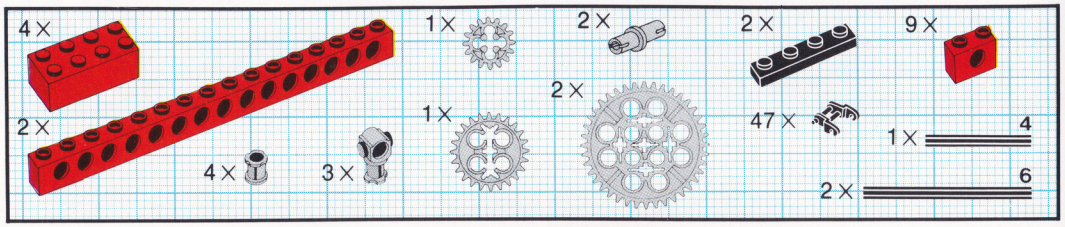
4 X
2 X
4 X
3 X
1 X
2 X
1 X
2 X
47 X
9 X
1 X
4
2 X
6

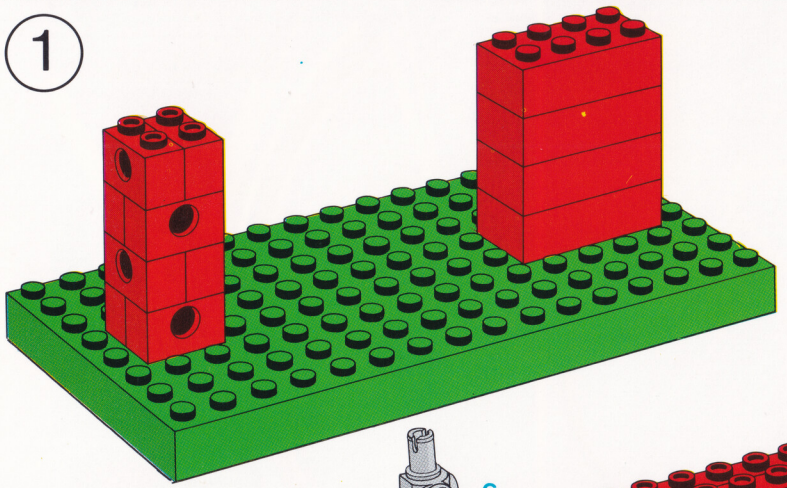
1

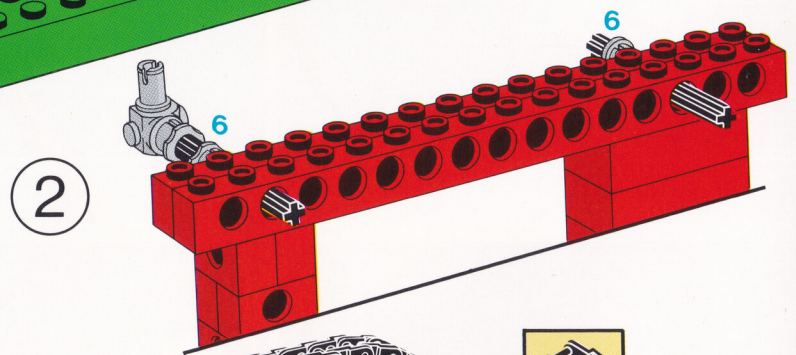
2
6
6

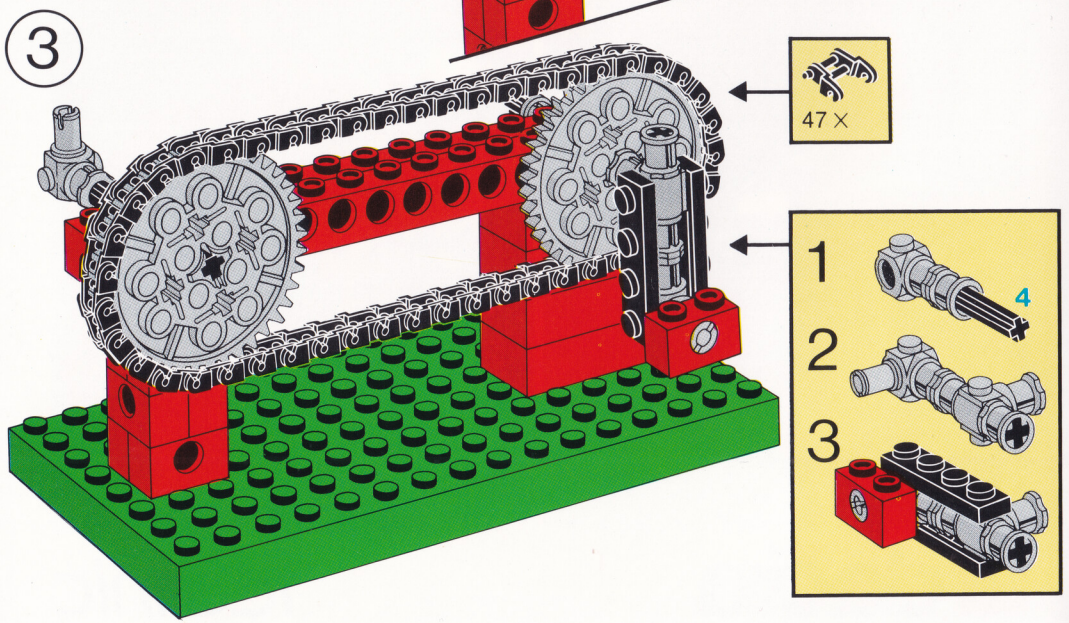
3
47 X
1
4
2
3

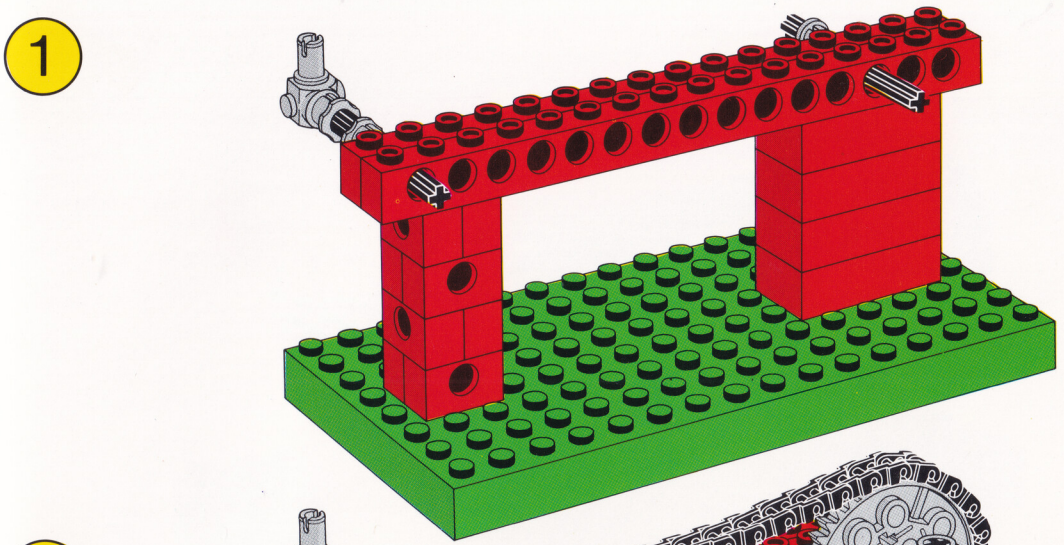
1

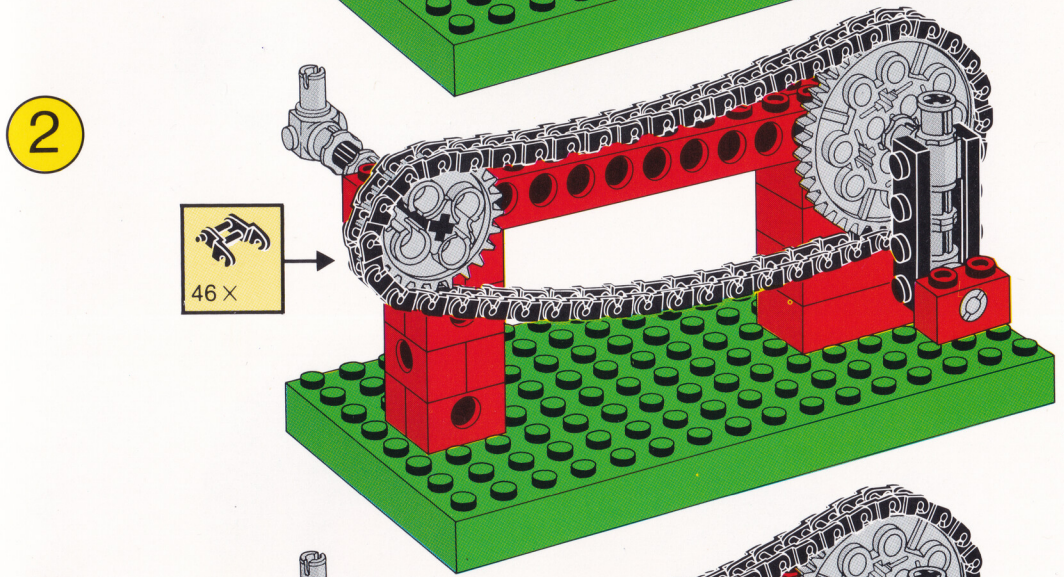
2
46 X

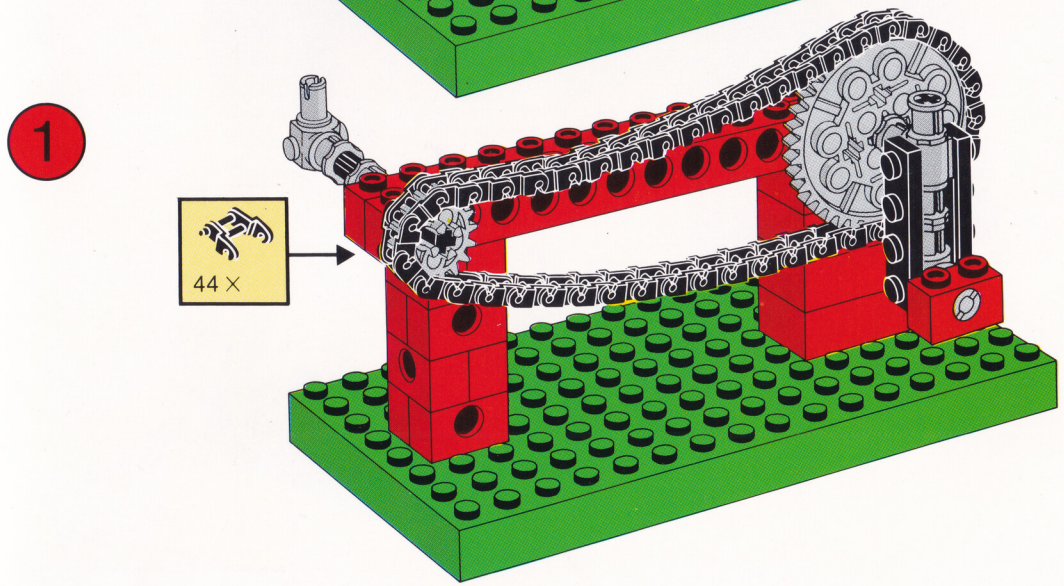
1
44 X

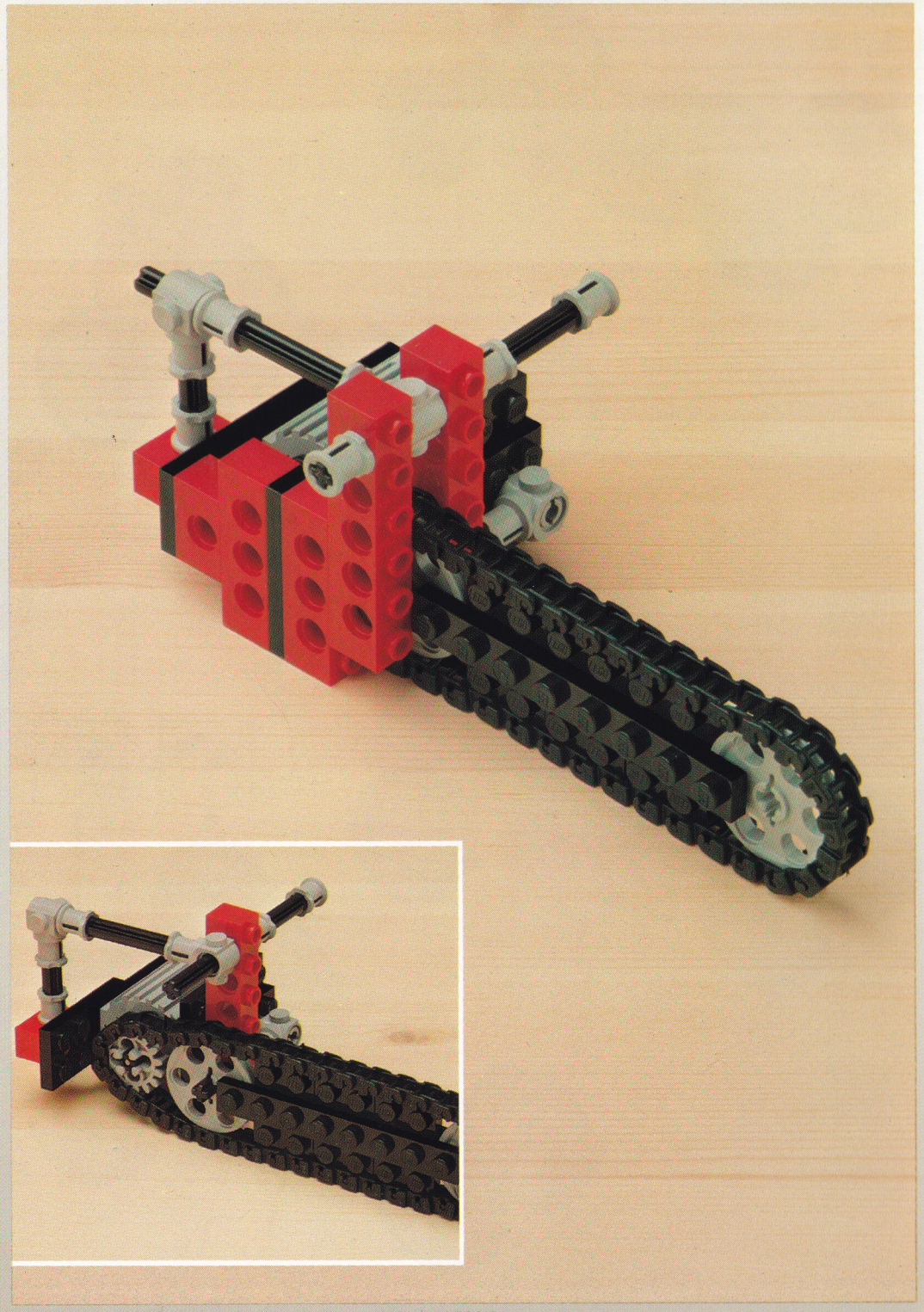

® LEGO and the LEGO Logo are registered trademarks. © 1985, 1990 LEGO Group.

PRINTED IN DENMARK BY LAURSEN-TØNDER



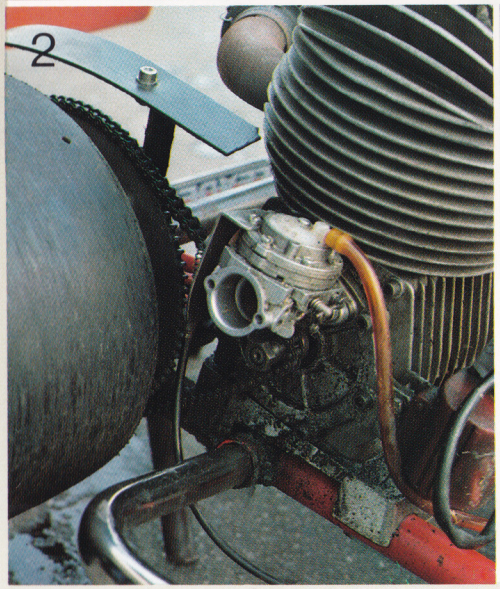

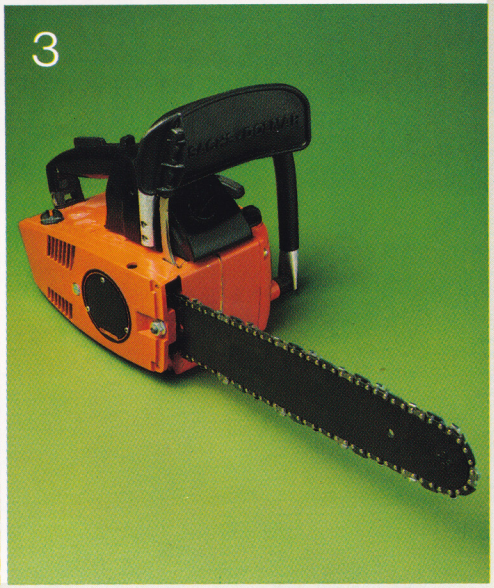

LEGO dacta

Technic

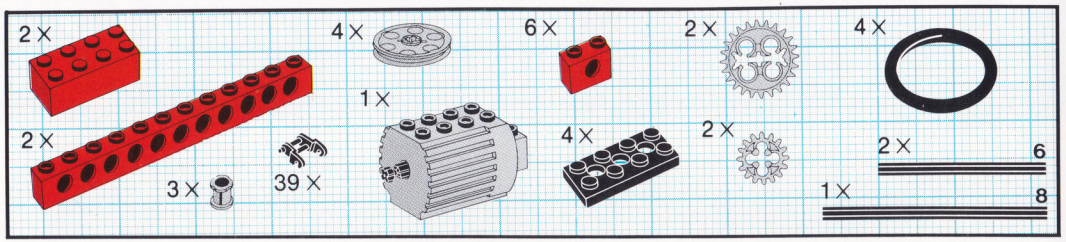
2 X
4 X
6 X
2 X
4 X
1 X
2 X
2 X
6
3 X
39 X
4 X
1 X
8

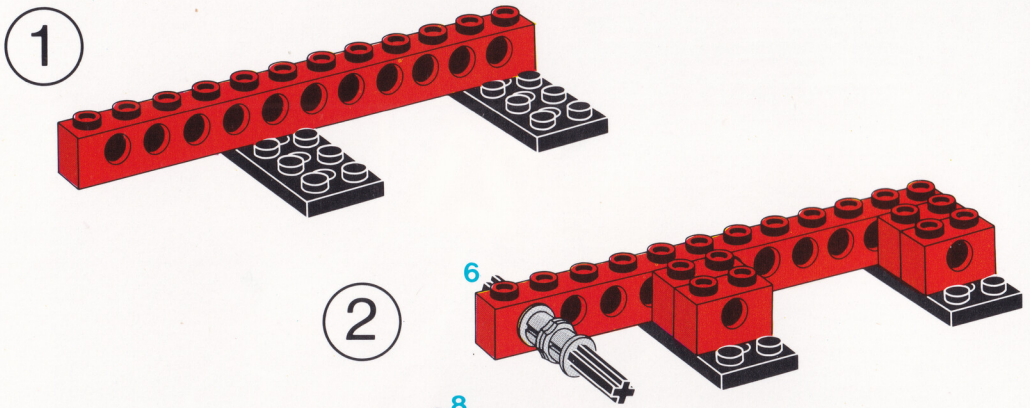
1
2
6

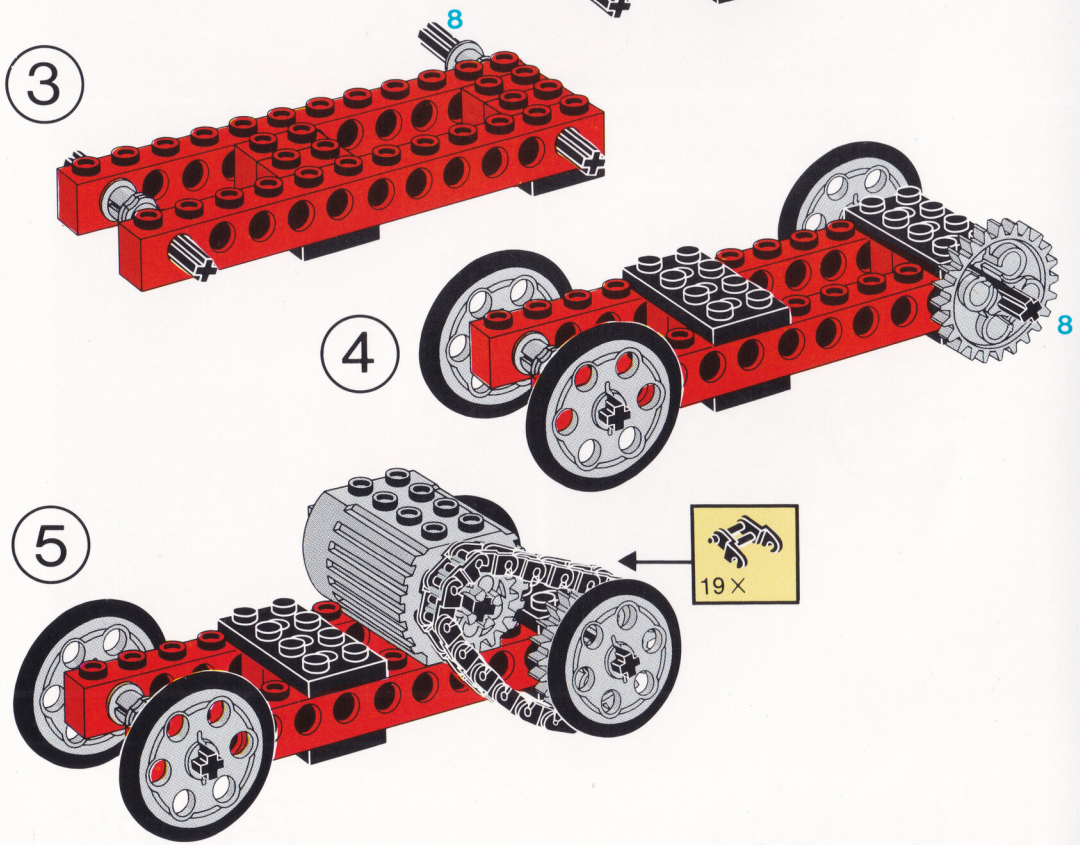
3
8
4
8
5
19 X

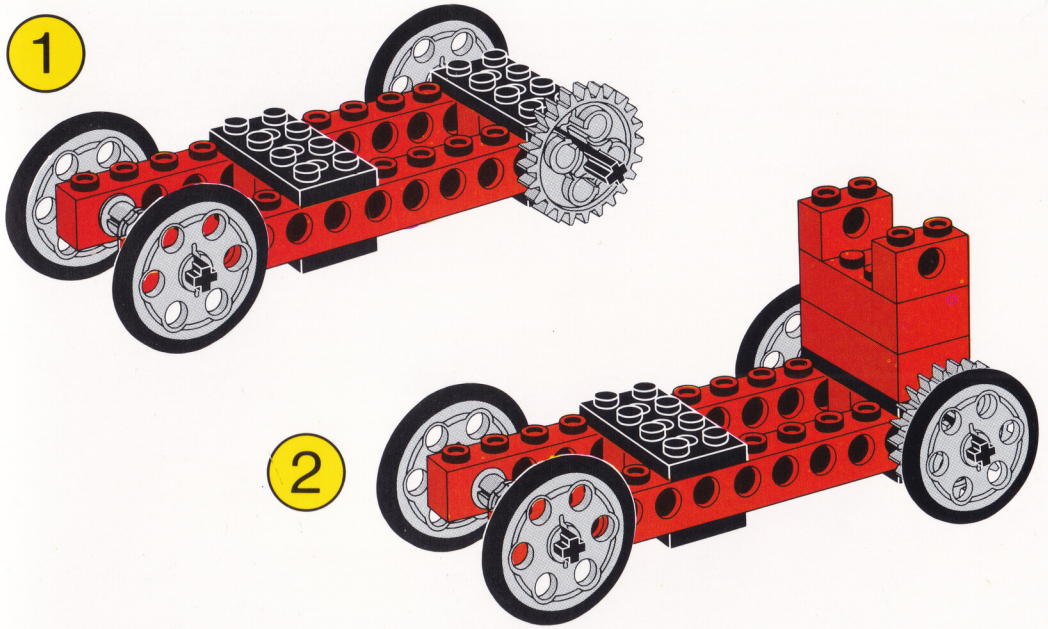
1
2

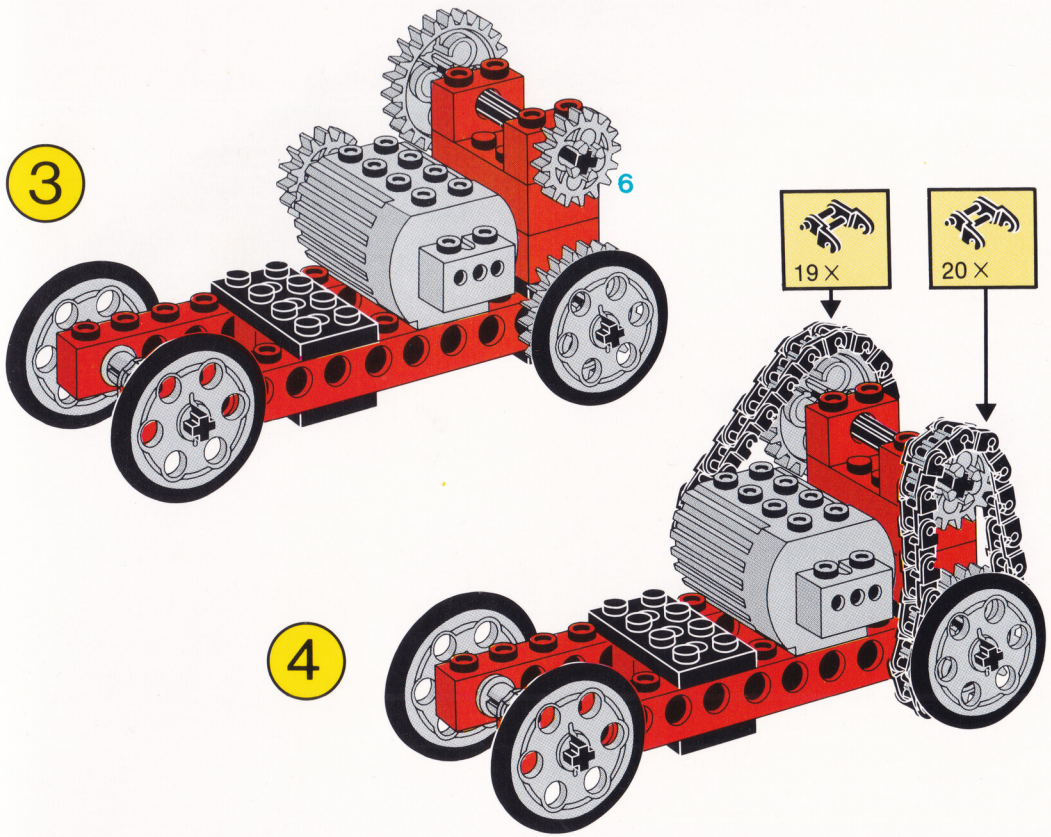
3
6
19 X
20 X
4

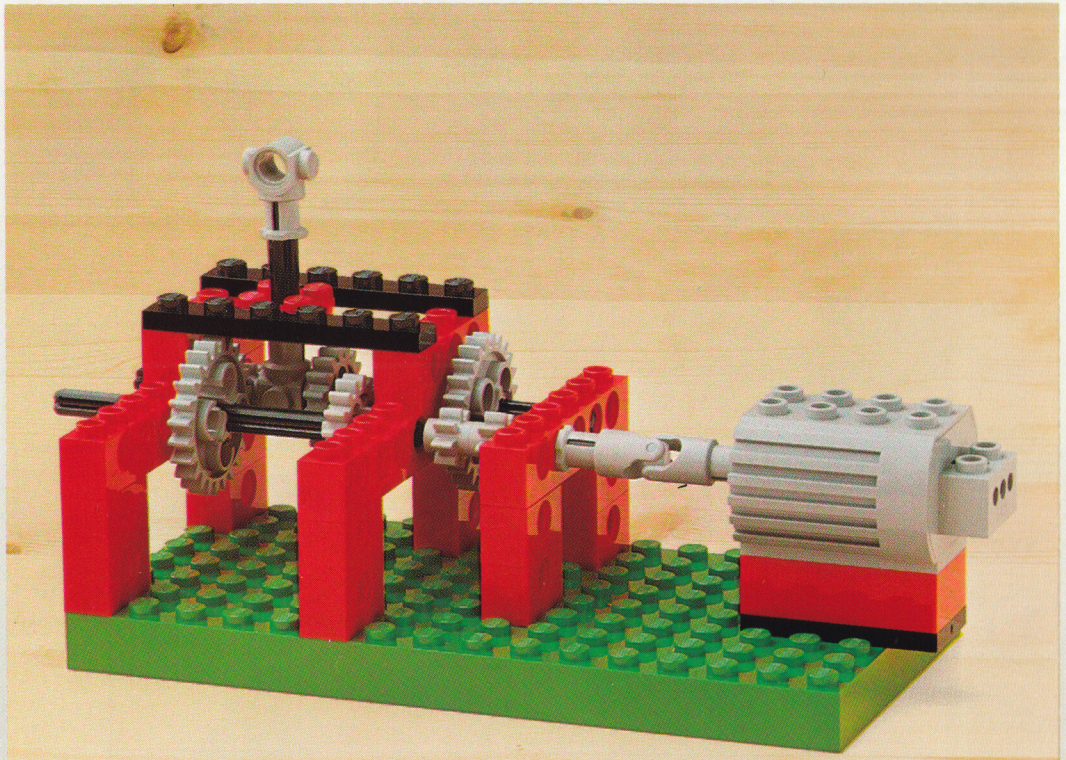

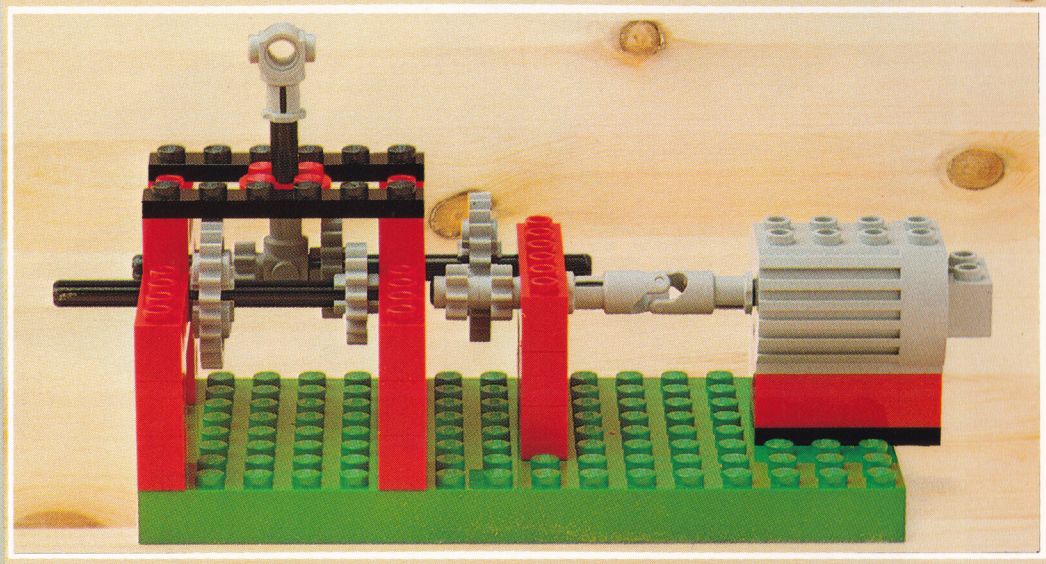

® LEGO and the LEGO Logo are registered trademarks. © 1985, 1990 LEGO Group.

PRINTED IN DENMARK BY LAURSEN TØNDER

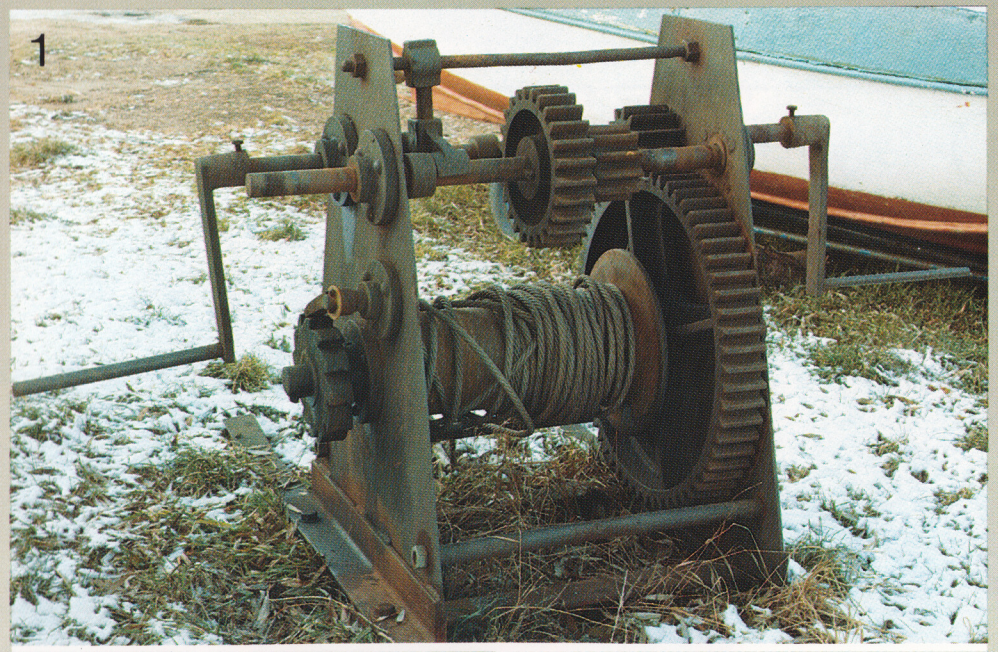

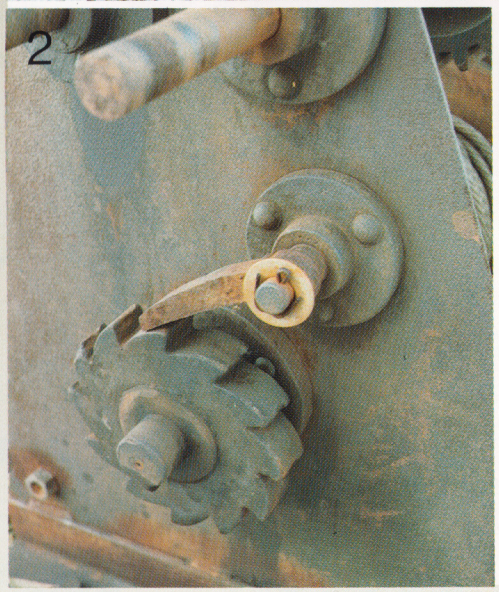

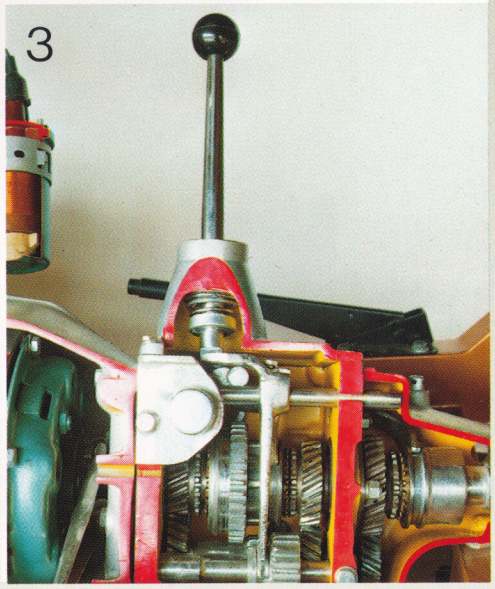

LEGO dacta

Technic

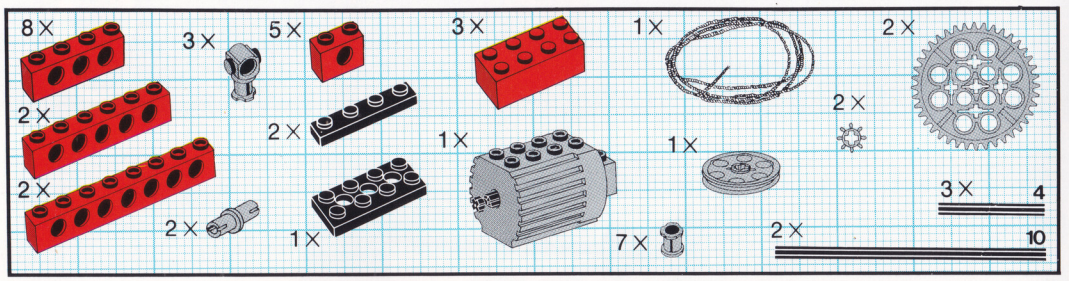
8×
2×
2×
3×
2×
5×
2×
1×
3×
1×
1×
7×
2×
2×
1×
2×
3×
4
2×
10

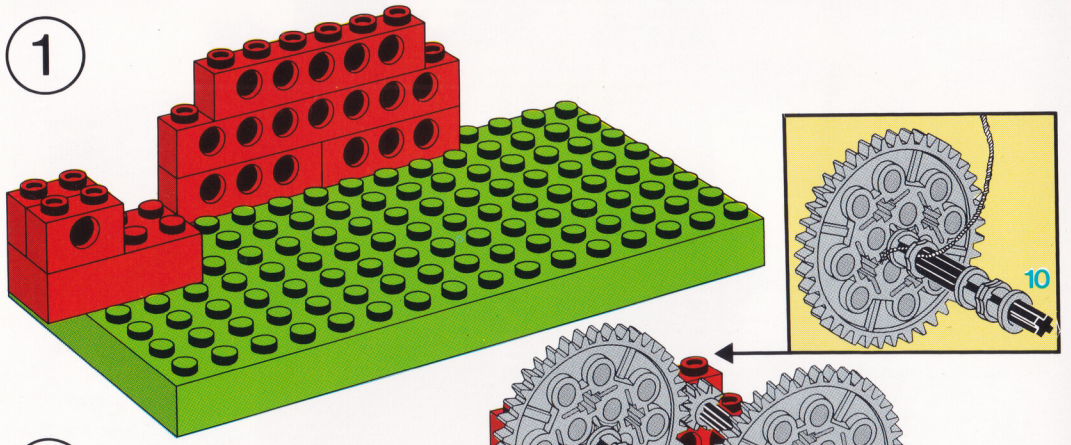
1
10

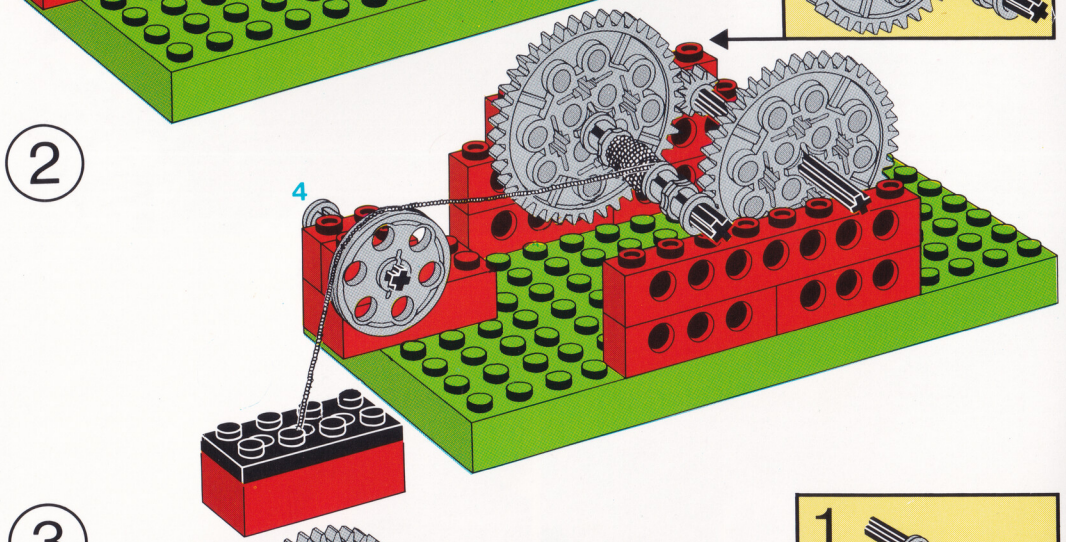
2
4

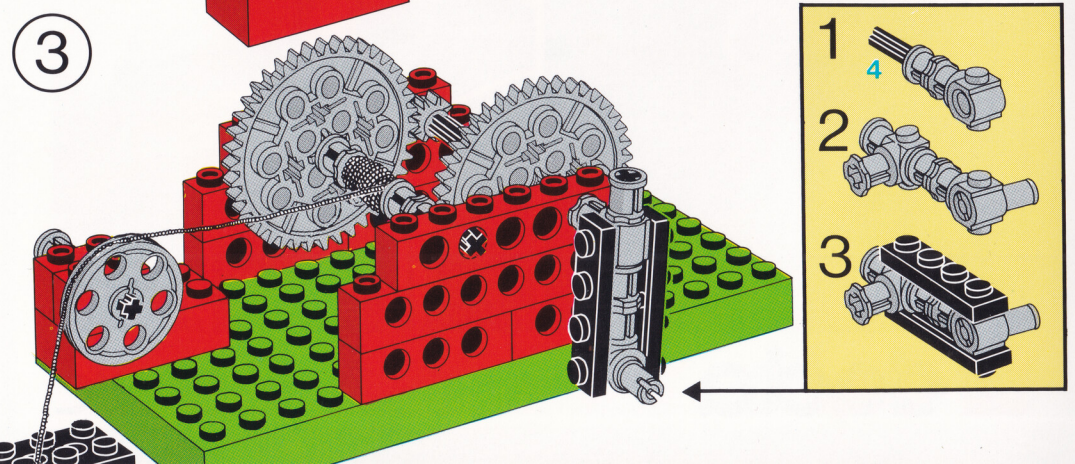
3
1
4
2
3

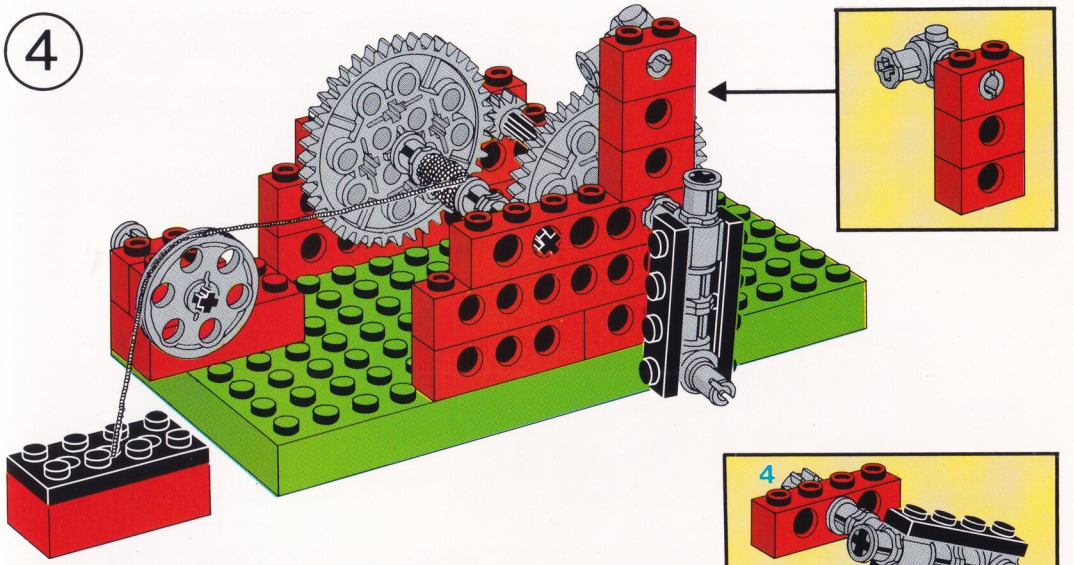
4

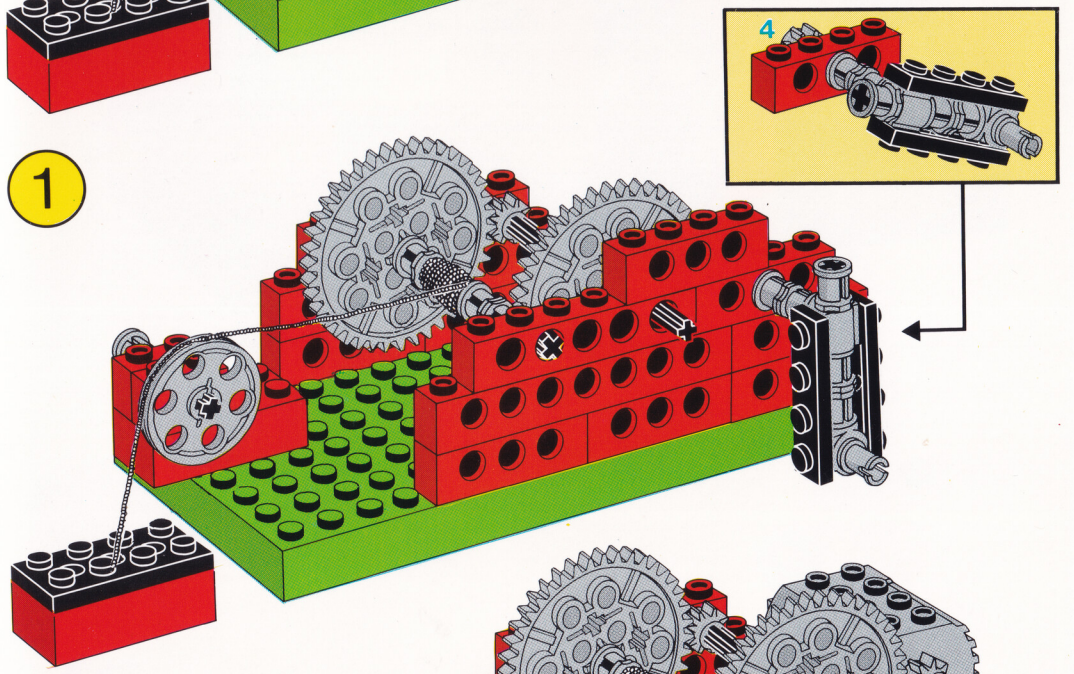
1
4

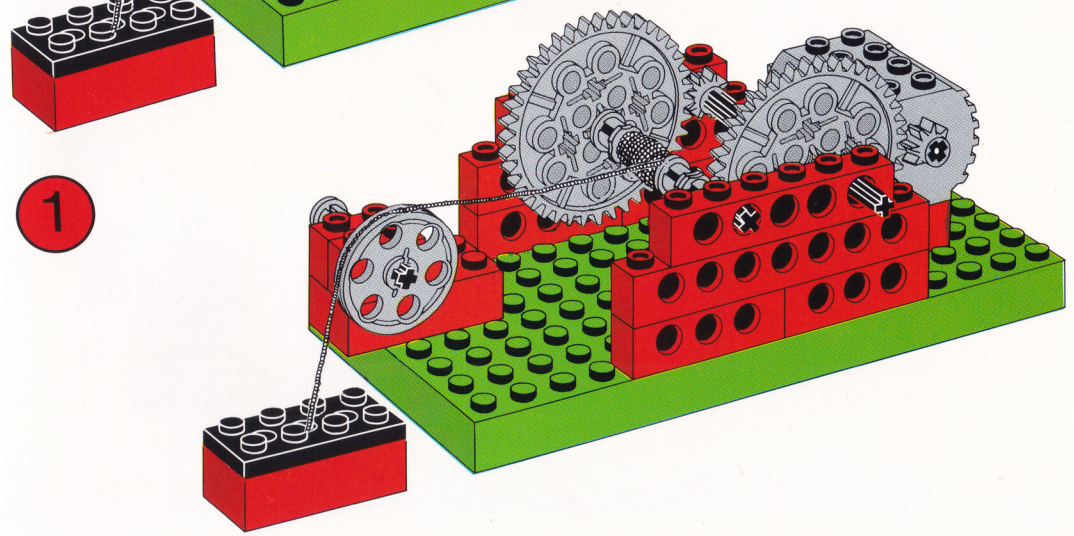
1

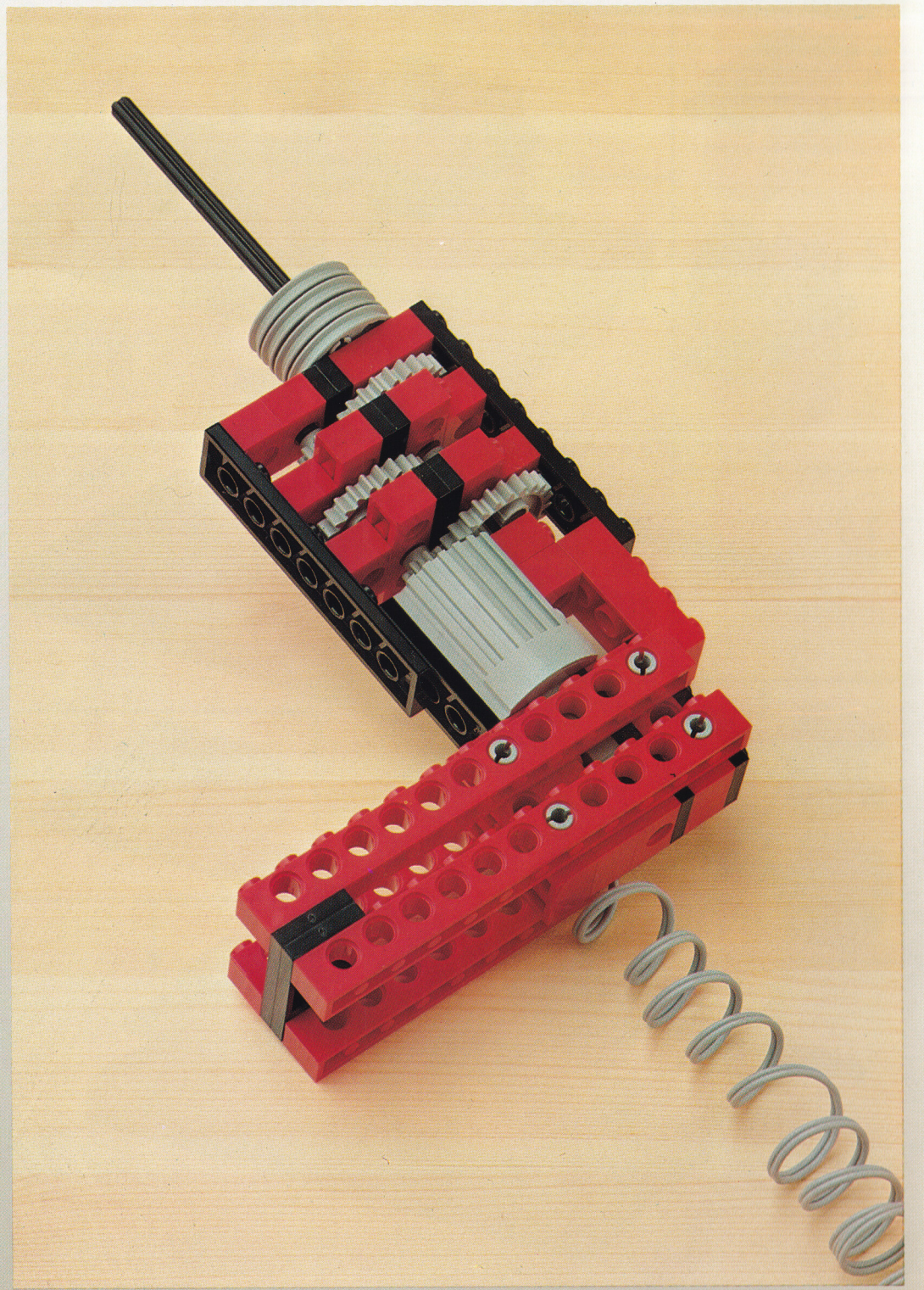

® LEGO and the LEGO Logo are registered trademarks. © 1985, 1990 LEGO Group.

PRINTED IN DENMARK BY LAURSEN TØNDER



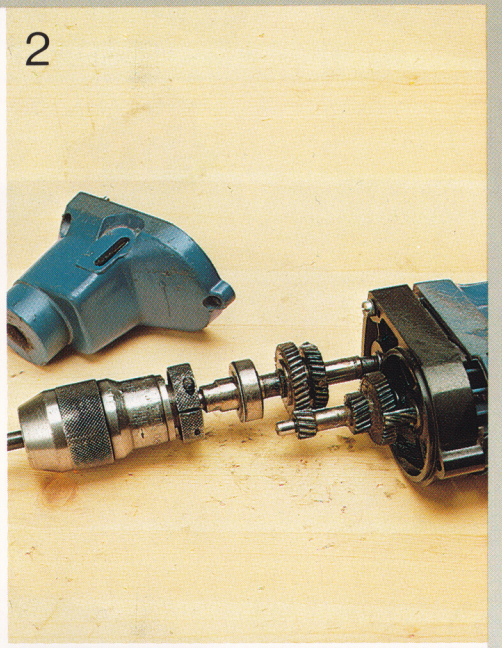

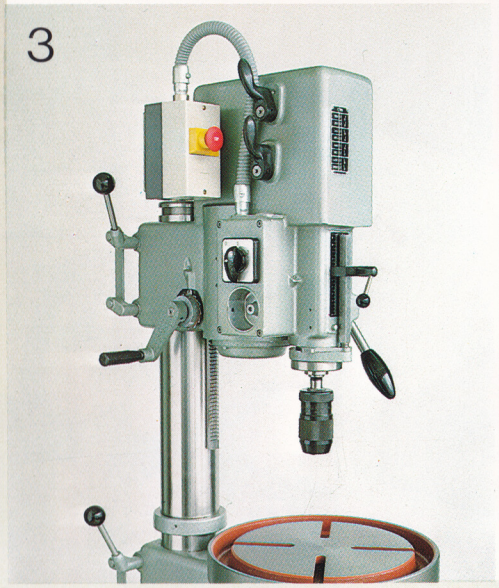

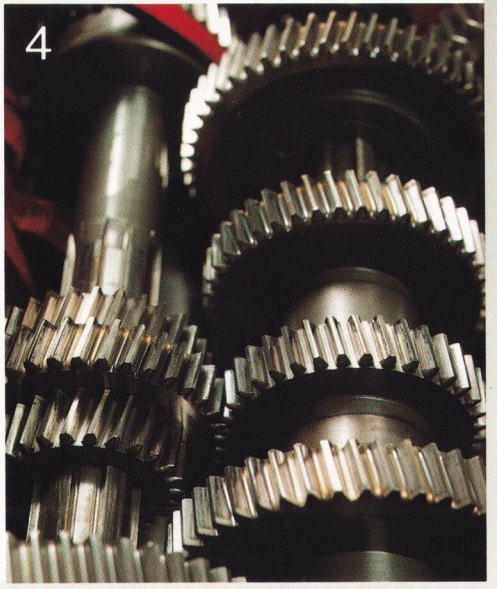

LEGO dacta

Technic

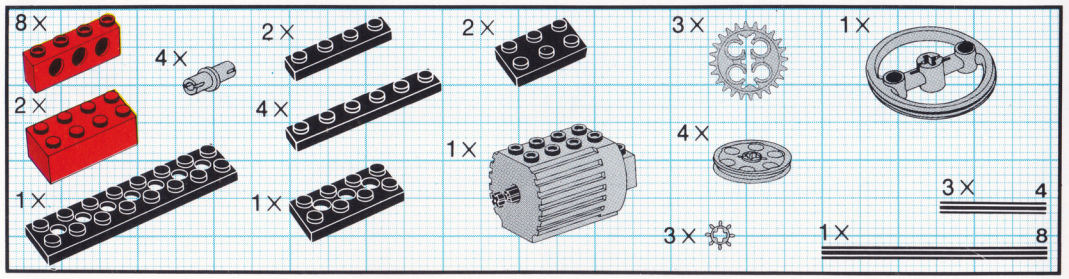
8 X
4 X
2 X
2 X
3 X
1 X
2 X
2 X
4 X
4 X
1 X
1 X
3 X
3 X
4
1 X
8

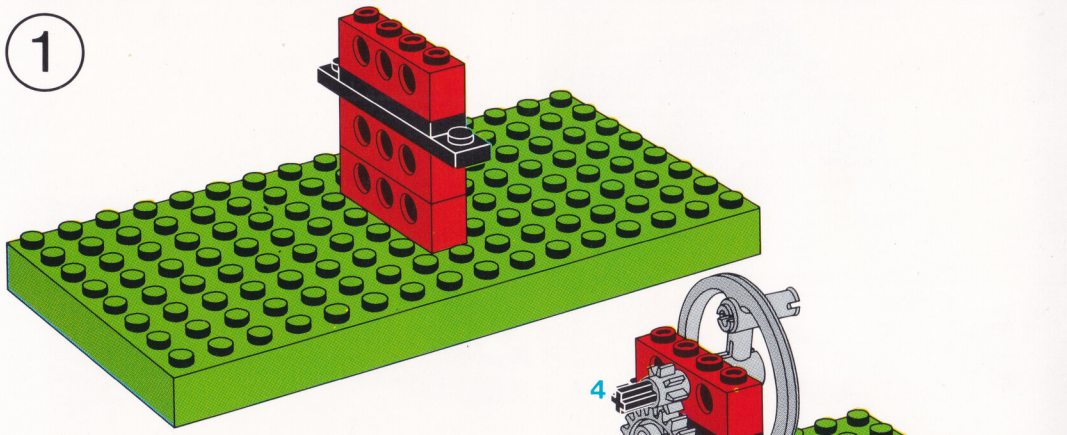
1
4
4

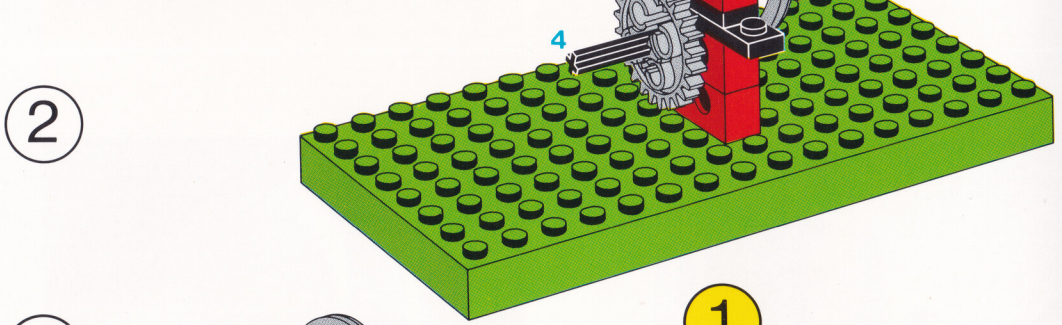
2

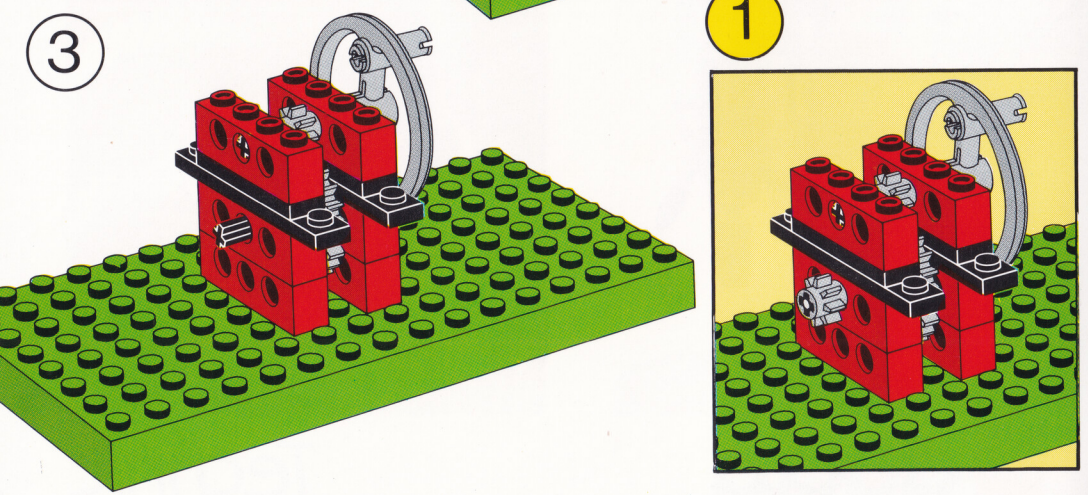
3
1

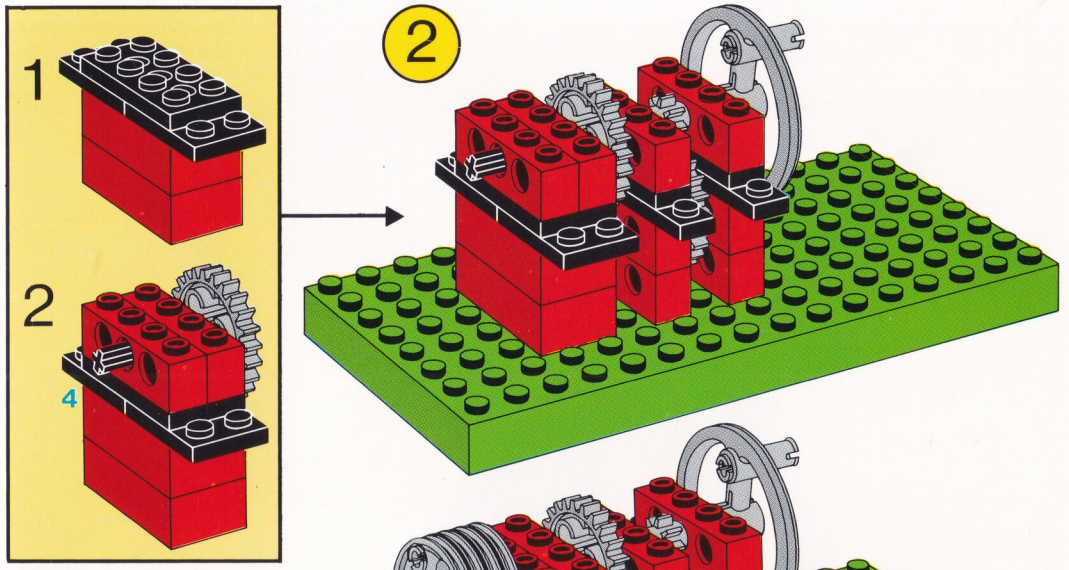
1
2
4
2

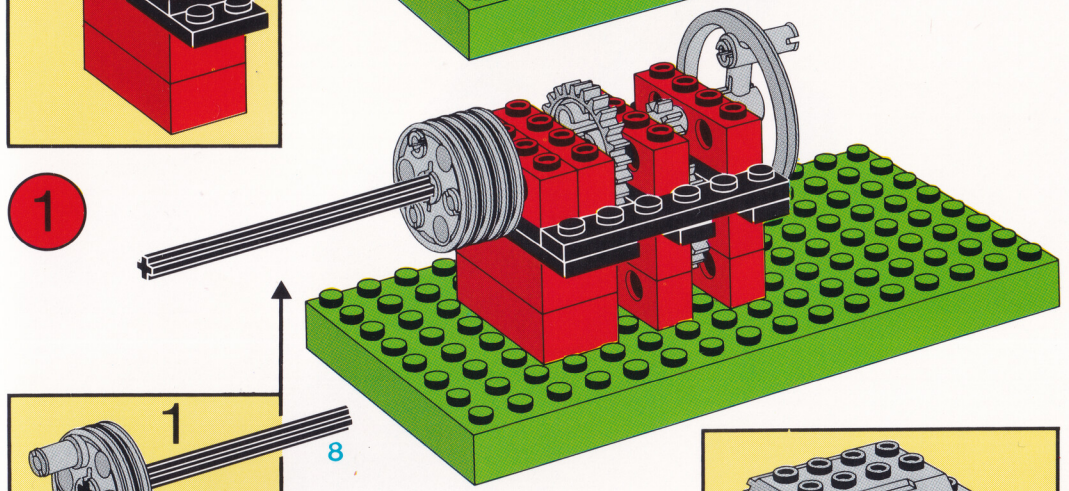
1

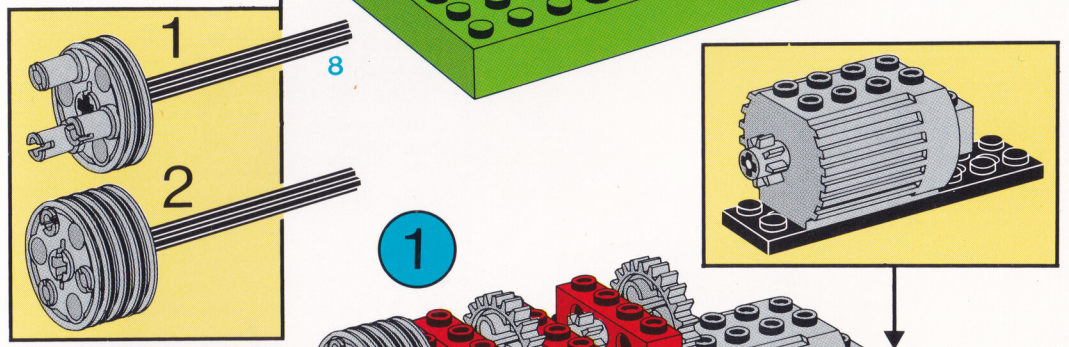
1
8
2

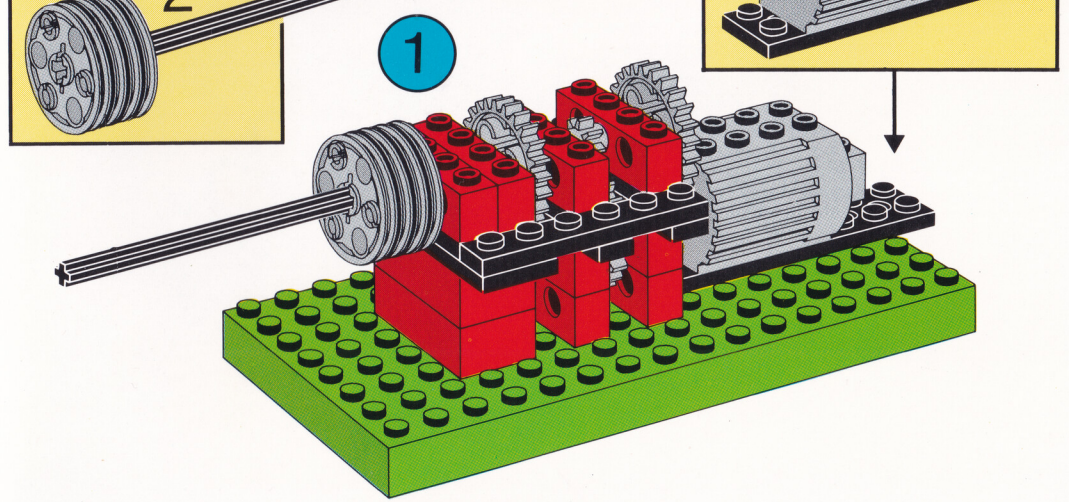
1

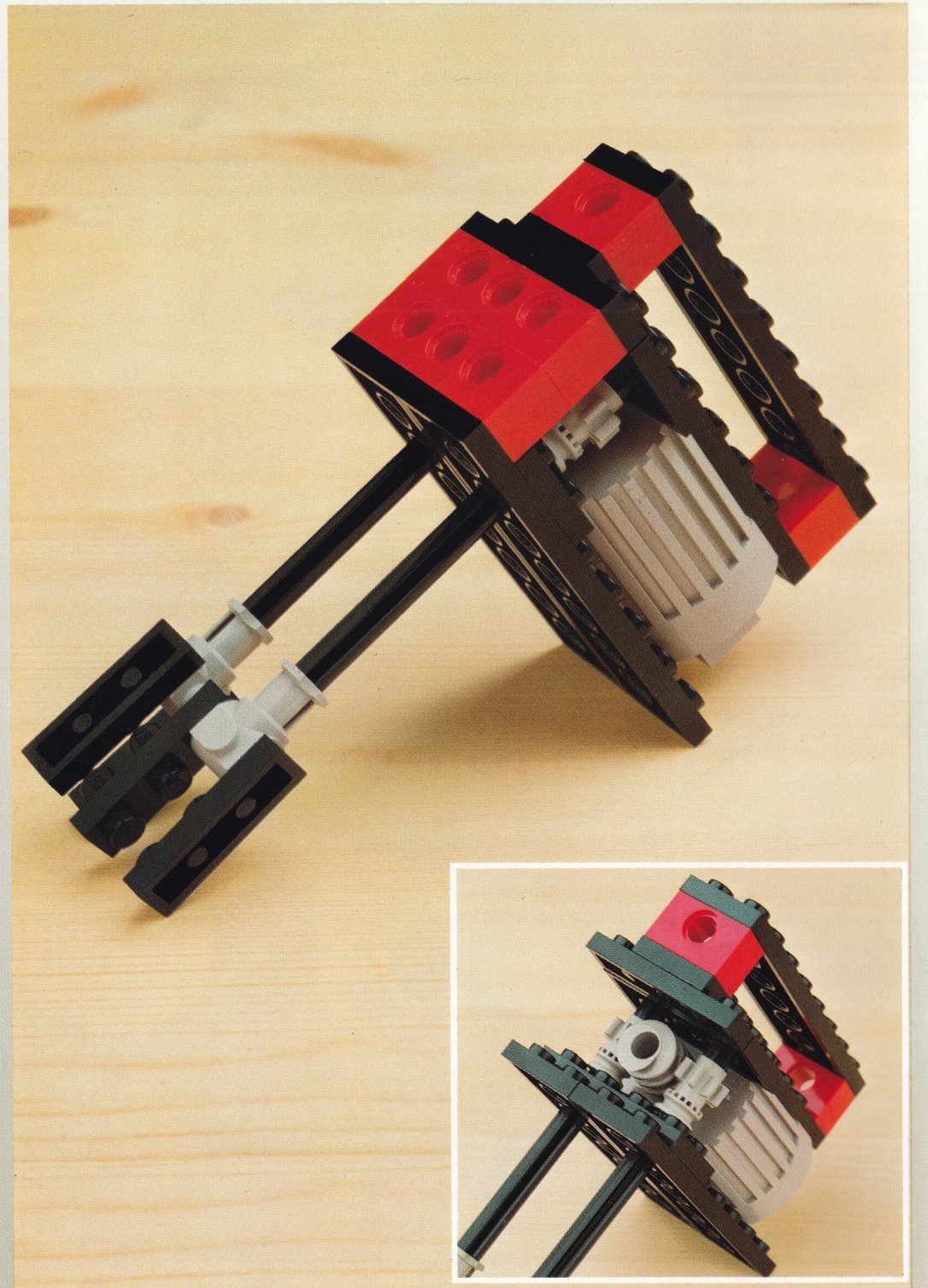

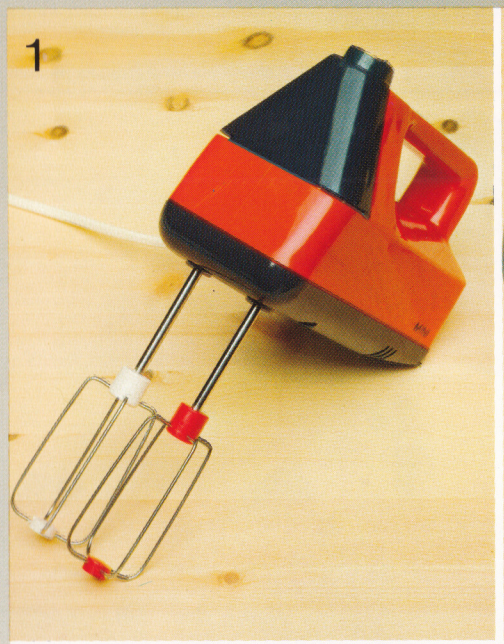

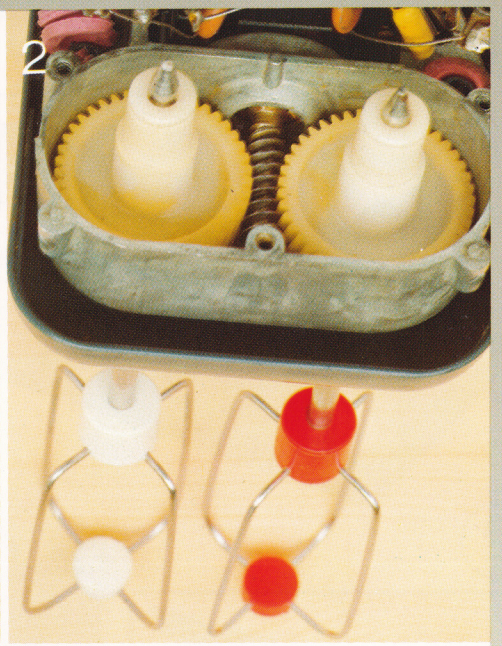

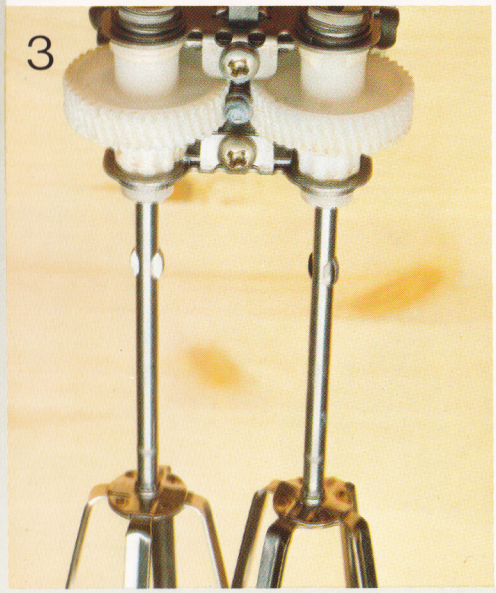

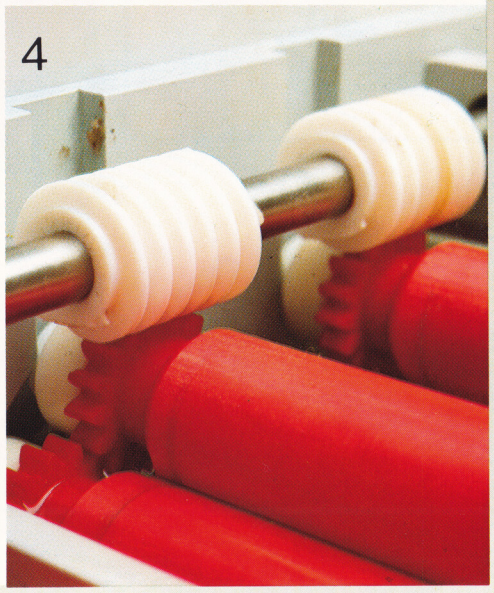

LEGO dacta Technic

® LEGO and the LEGO Logo are registered trademarks. © 1985, 1990 LEGO Group.

PRINTED IN DENMARK BY LAURSEN-TØNDER

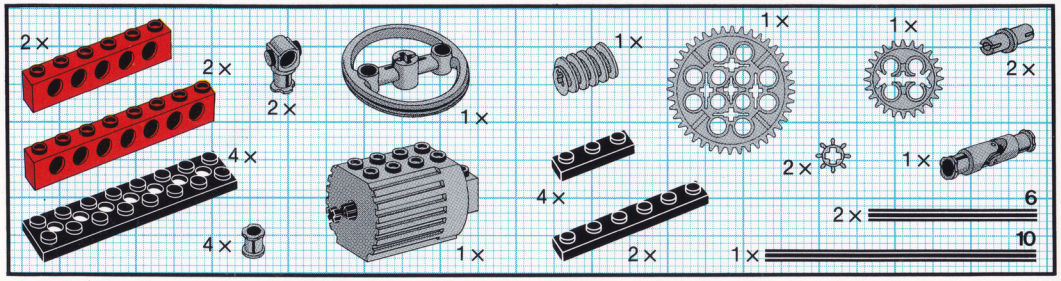

1

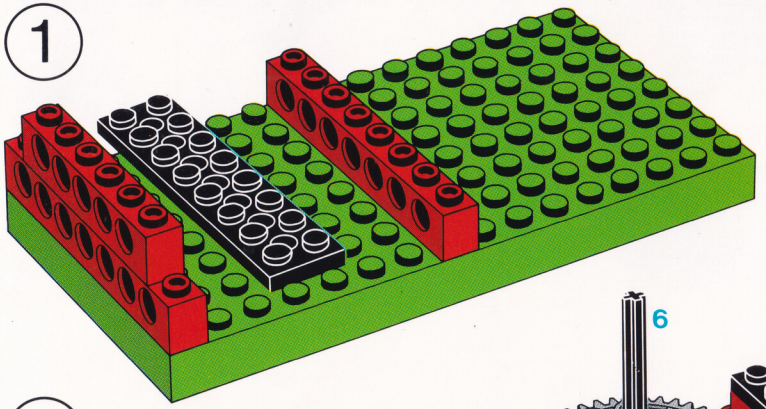

2

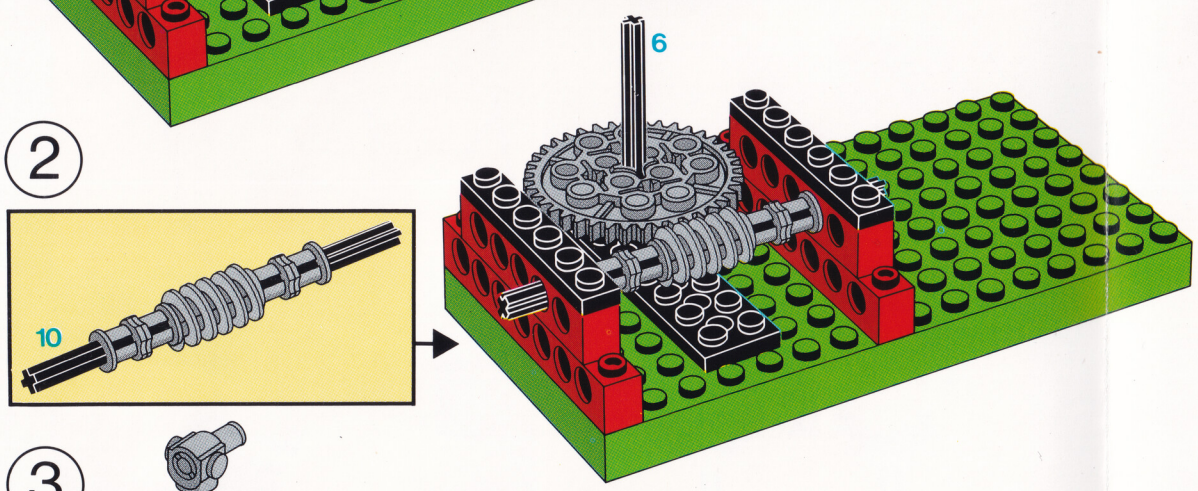

3

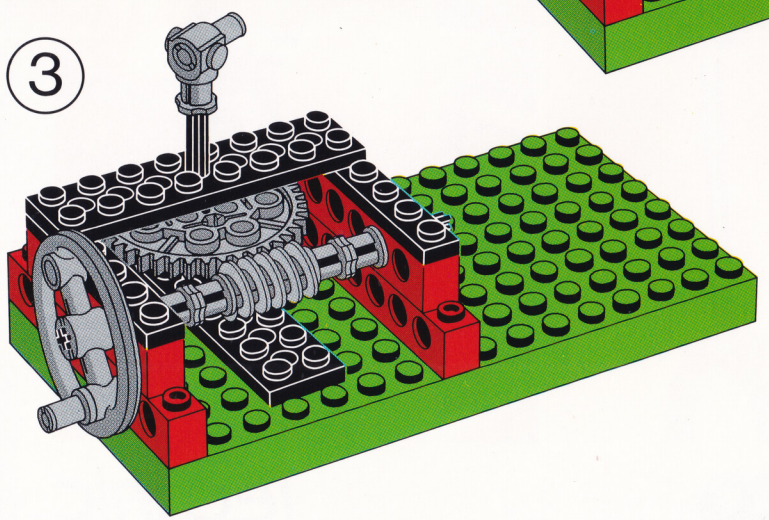

1

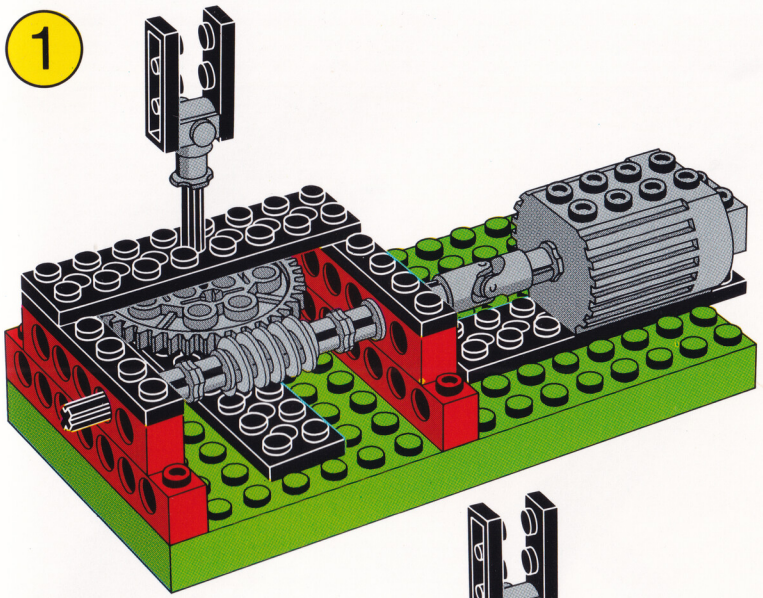

1

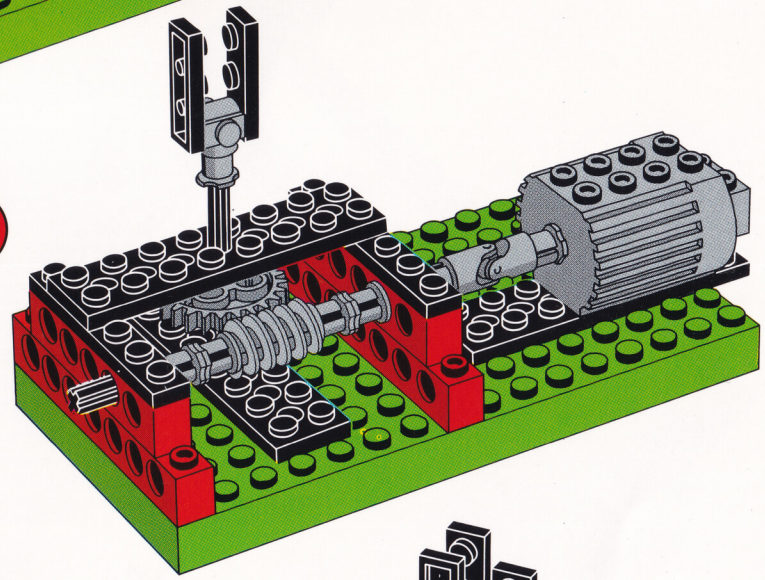

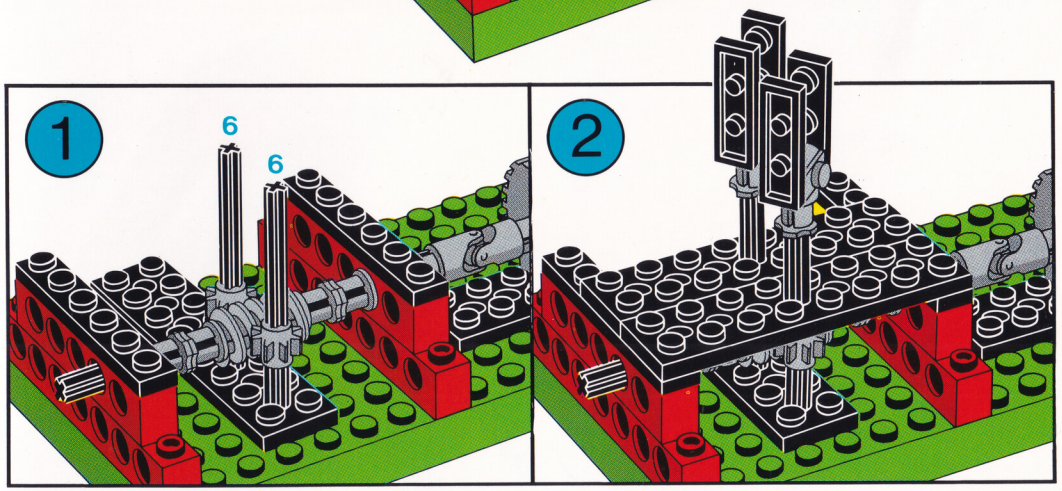

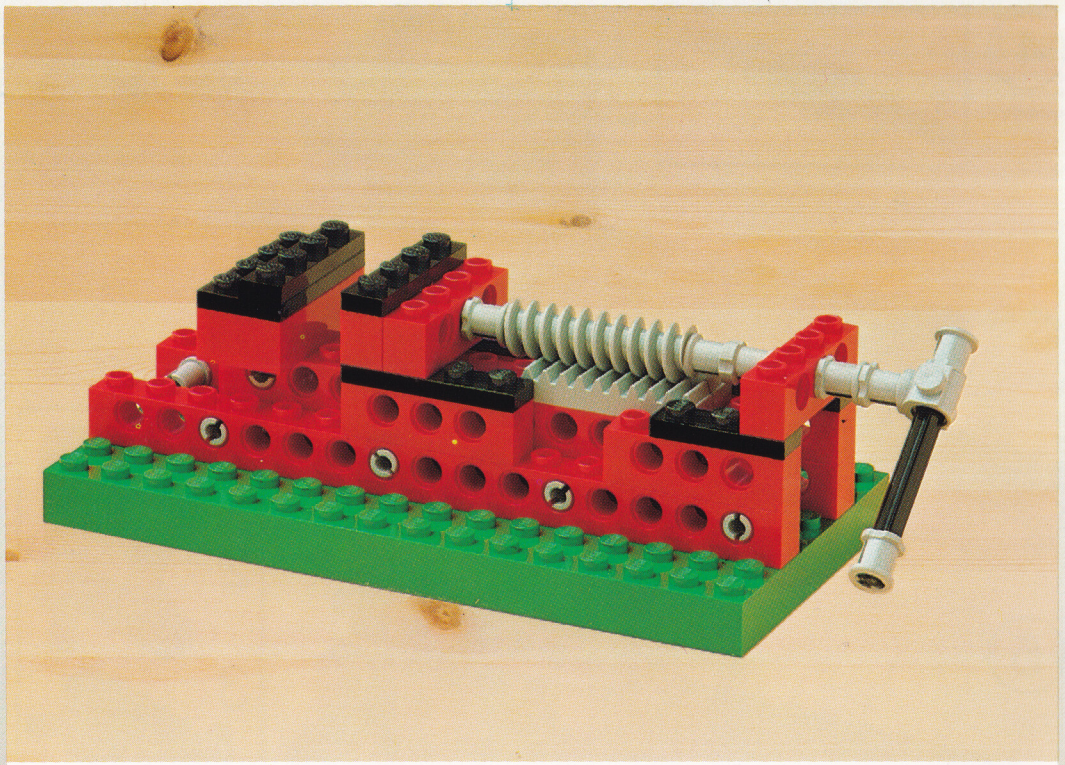

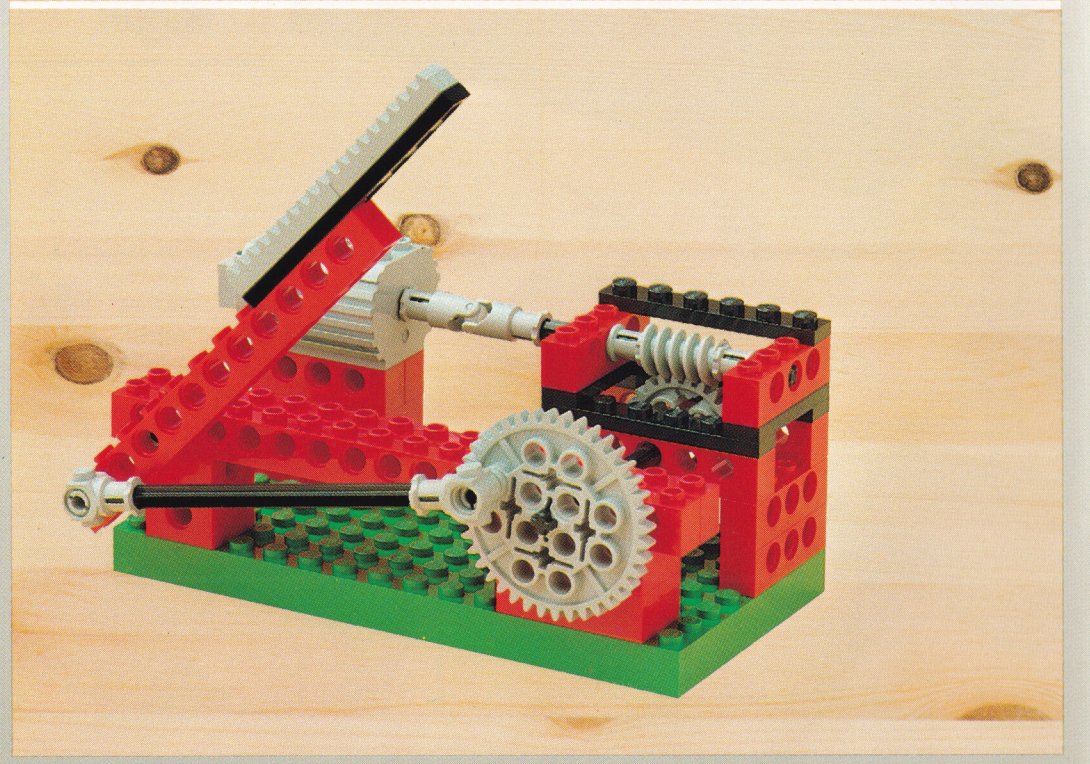

® LEGO and the LEGO Logo are registered trademarks. © 1985, 1990 LEGO Group.

PRINTED IN DENMARK BY LAURSEN-TØNDER



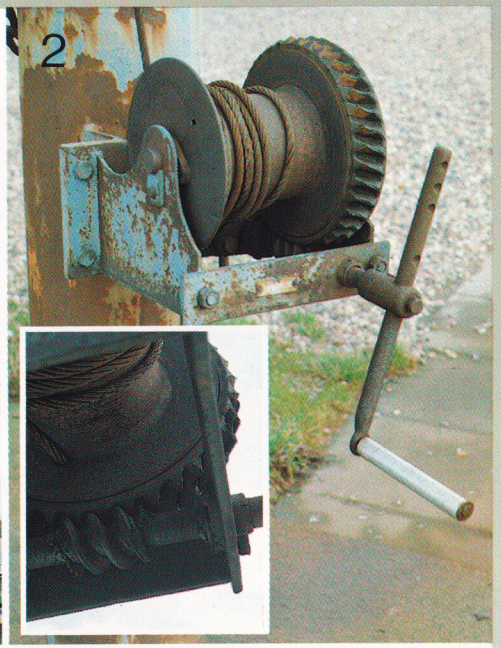

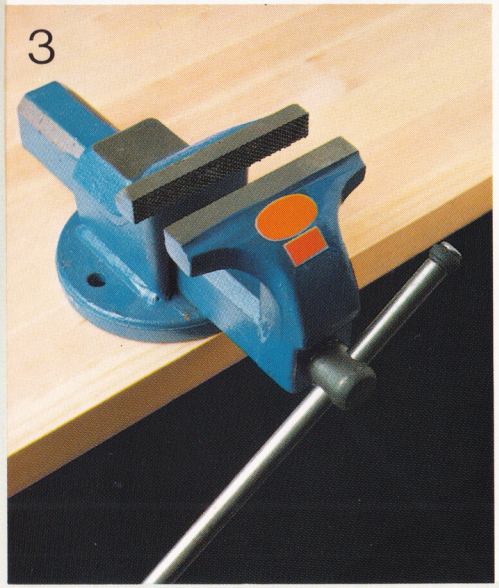



LEGO dacta Technic

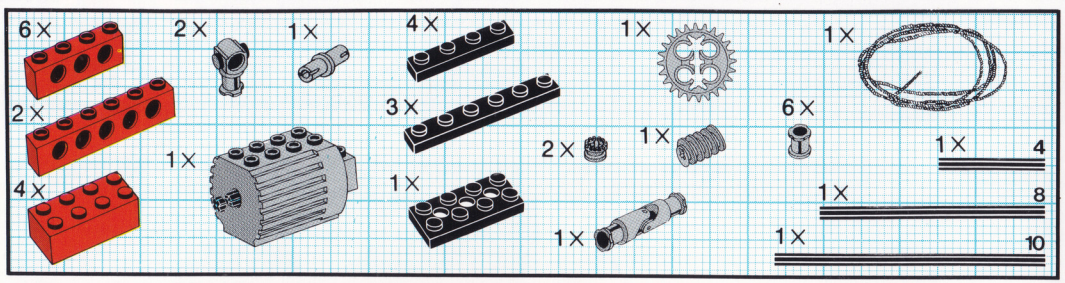
6×
2×
4×
2×
1×
1×
4×
3×
1×
2×
1×
1×
1×
6×
1×
4
1×
8
1×
10

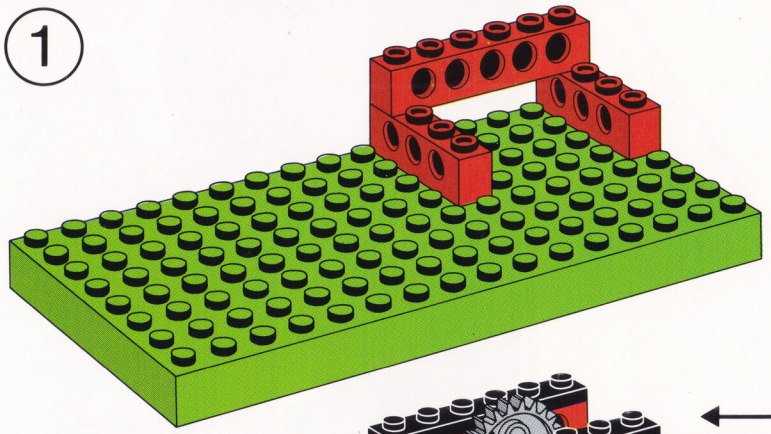

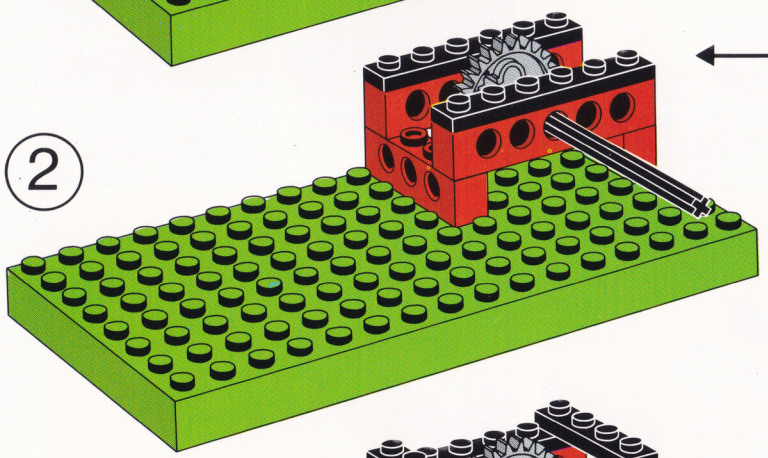

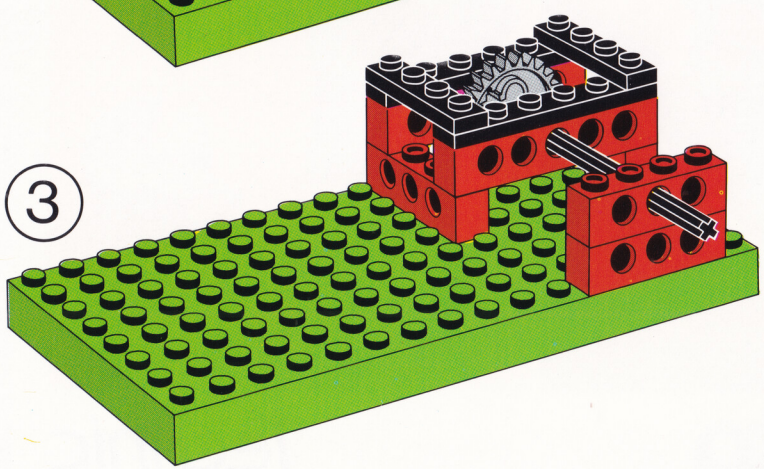

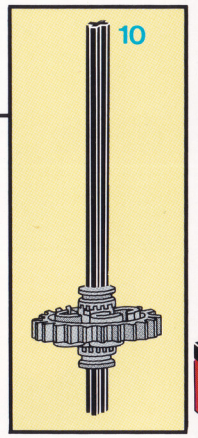
10

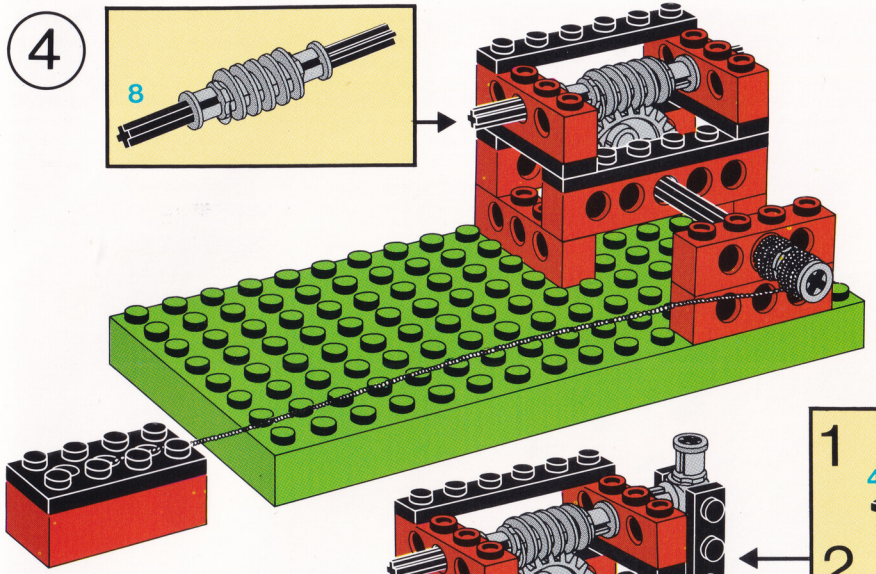
8

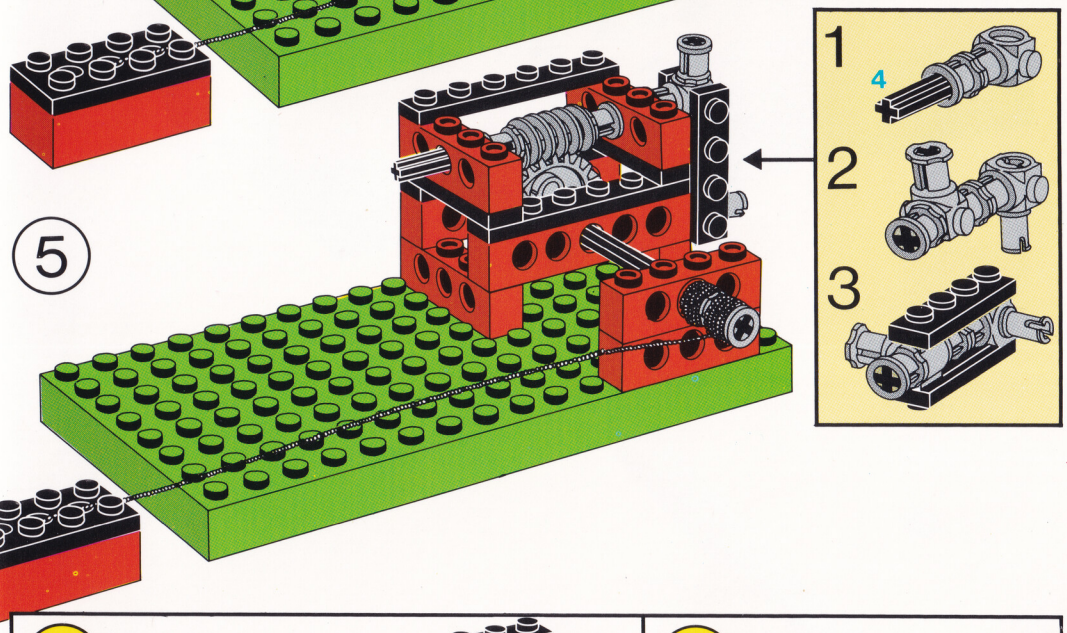
1
4
2
3

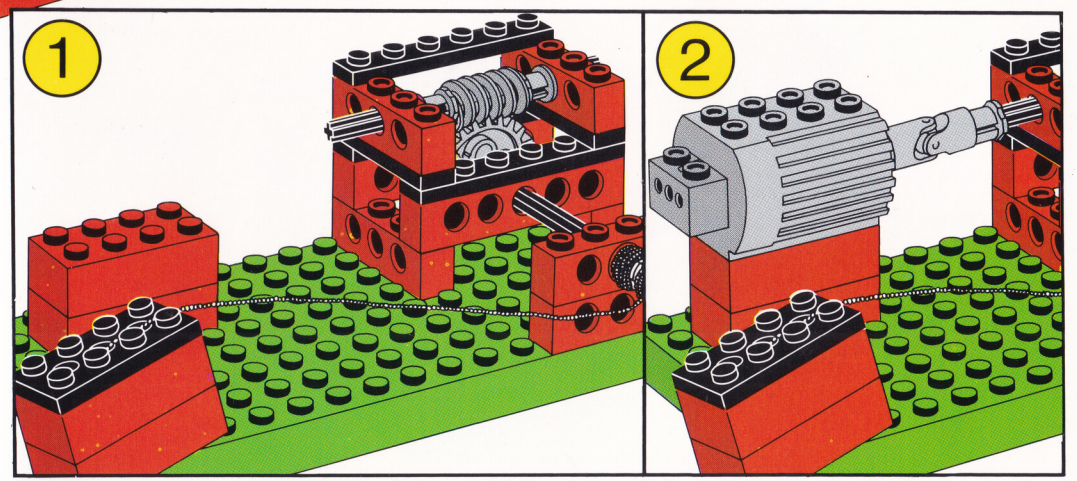

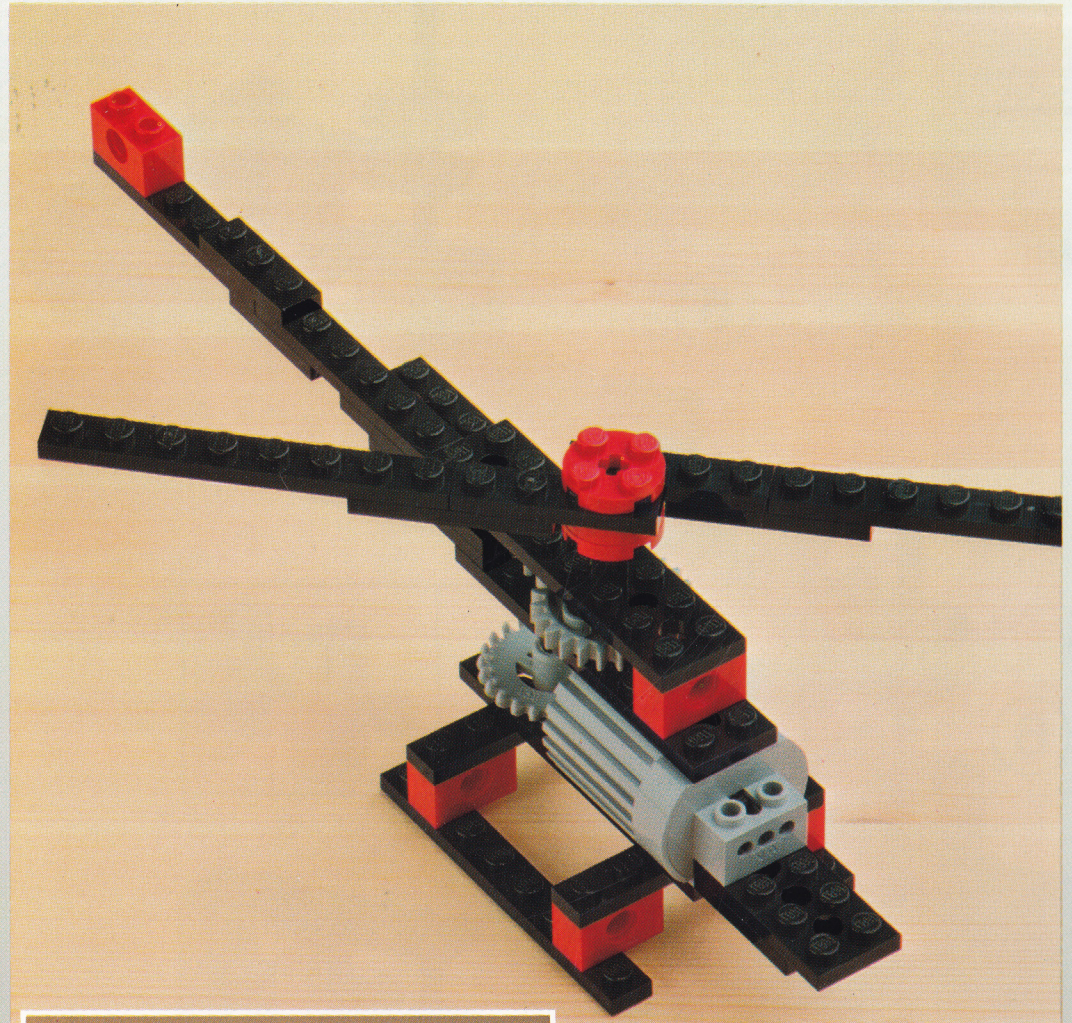

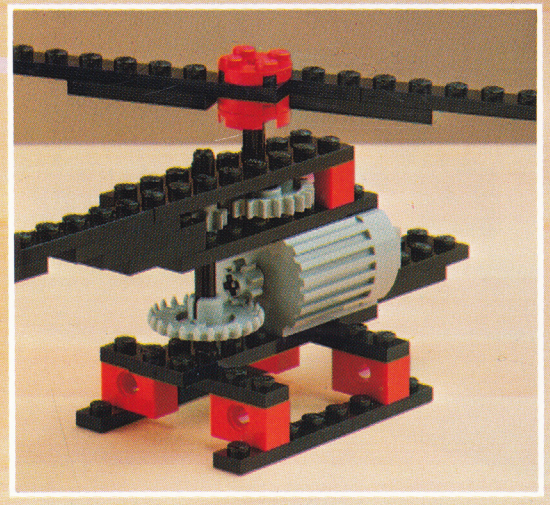

® LEGO and the LEGO Logo are registered trademarks. © 1985, 1990 LEGO Group.

PRINTED IN DENMARK BY LAURSEN-TØNDER



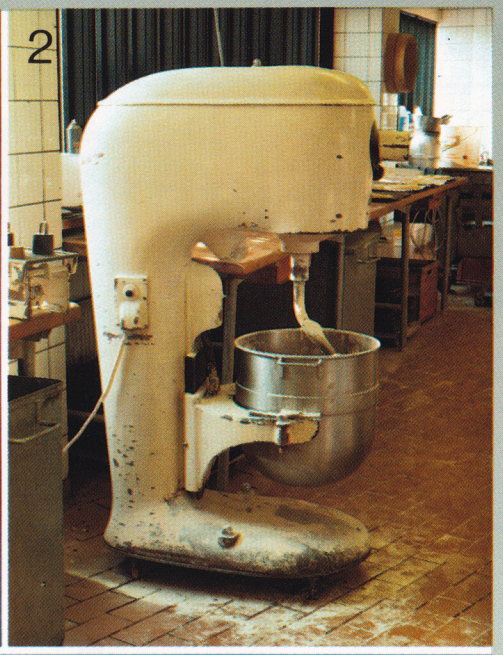



LEGO dacta Technic

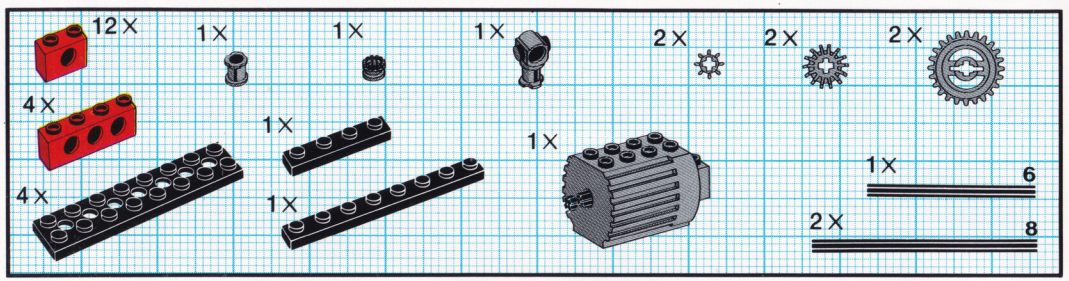
12X
1X
1X
1X
2X
2X
2X
4X
1X
1X
4X
1X
1X
6
2X
8

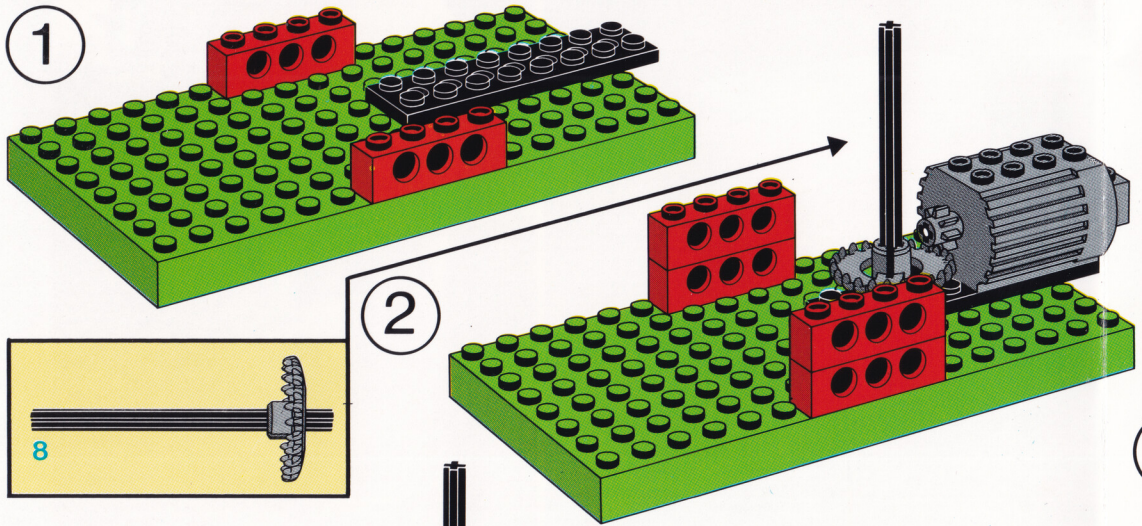
1
2
8

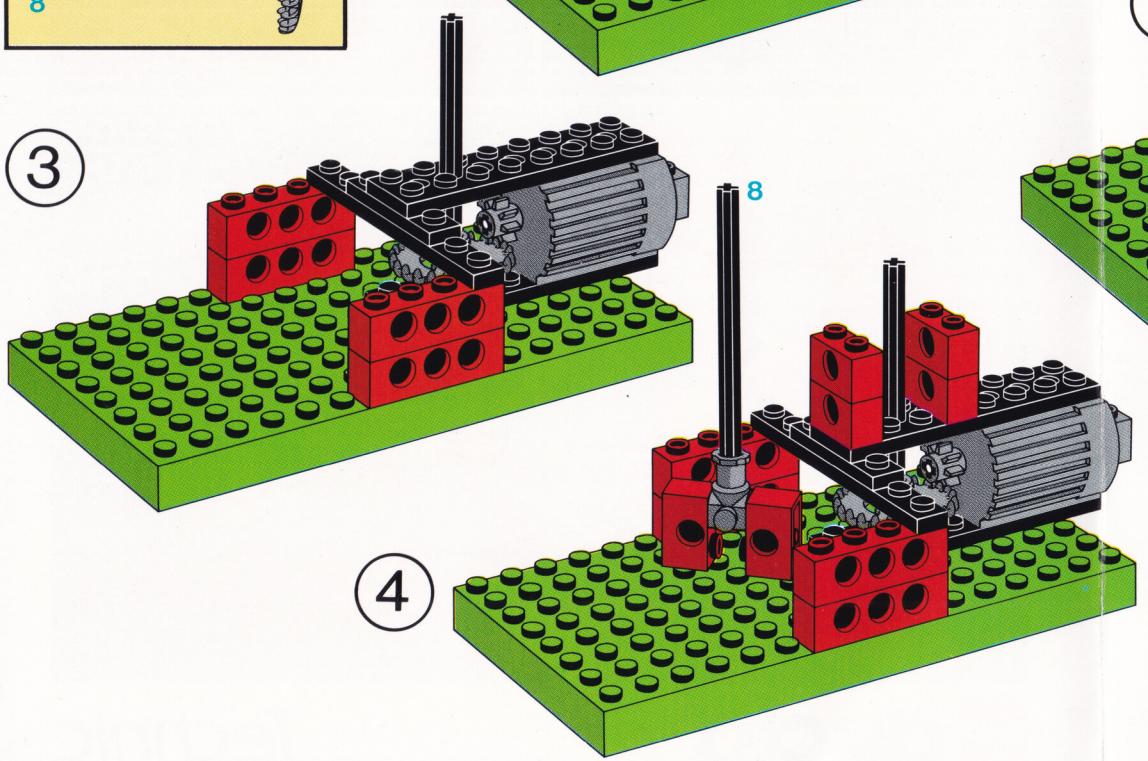
3
8
4

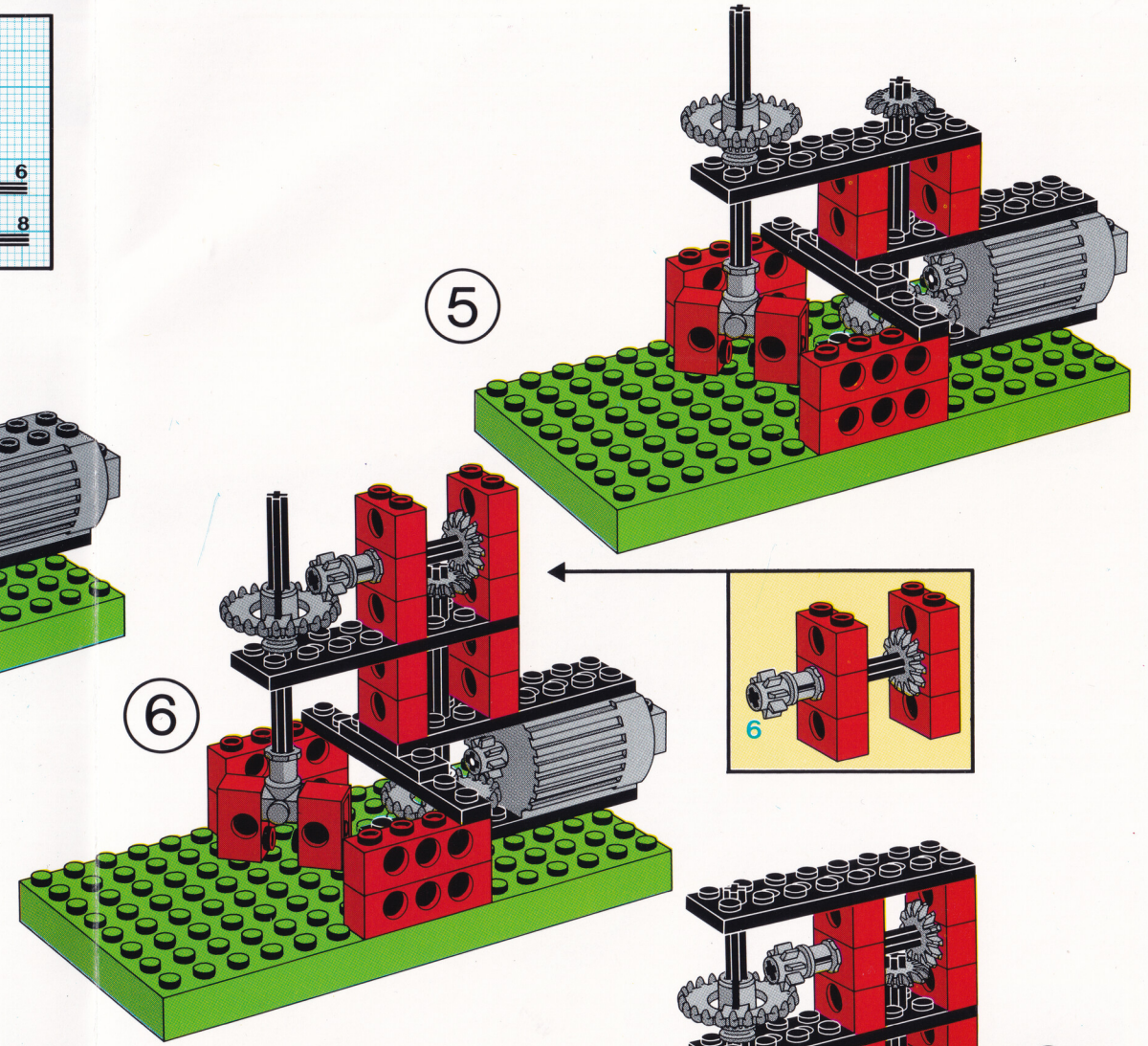
5
6
6

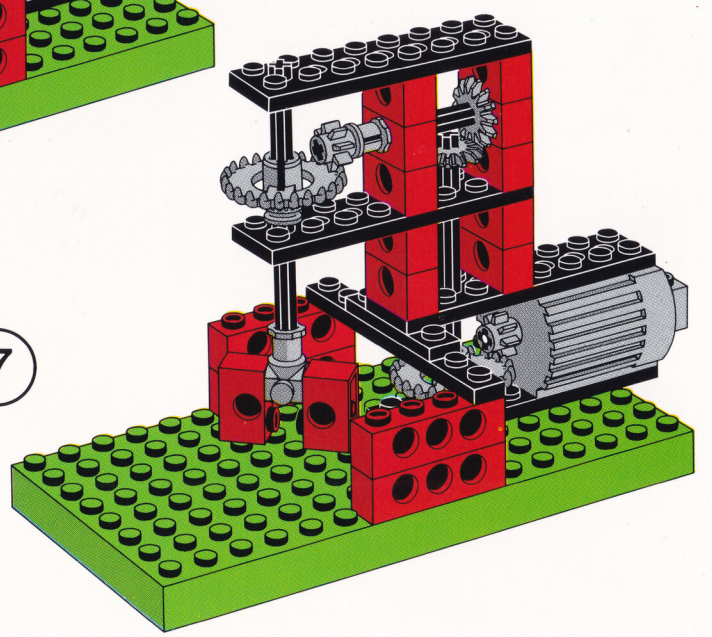
7

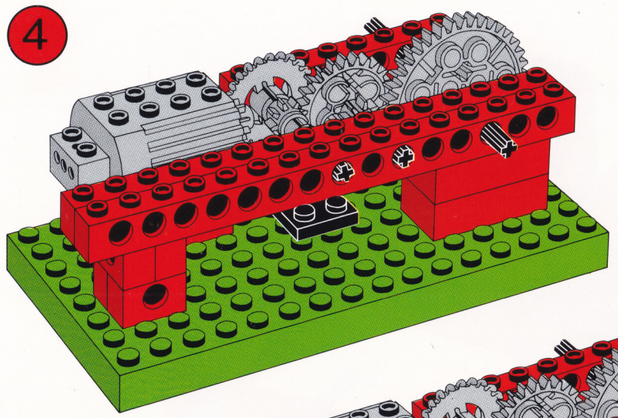

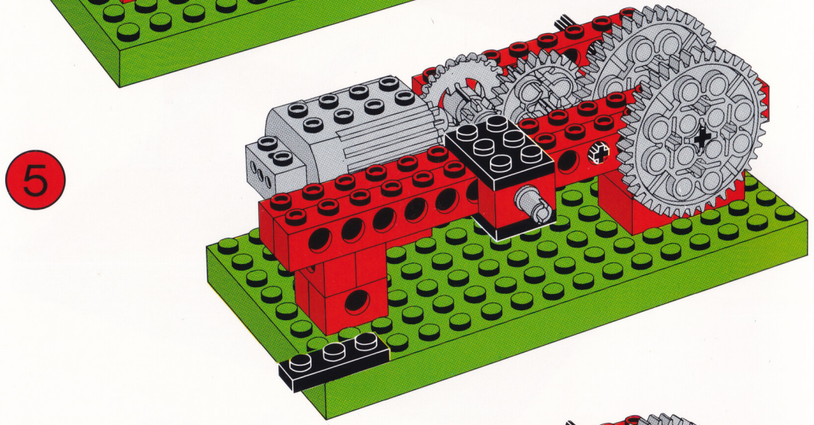

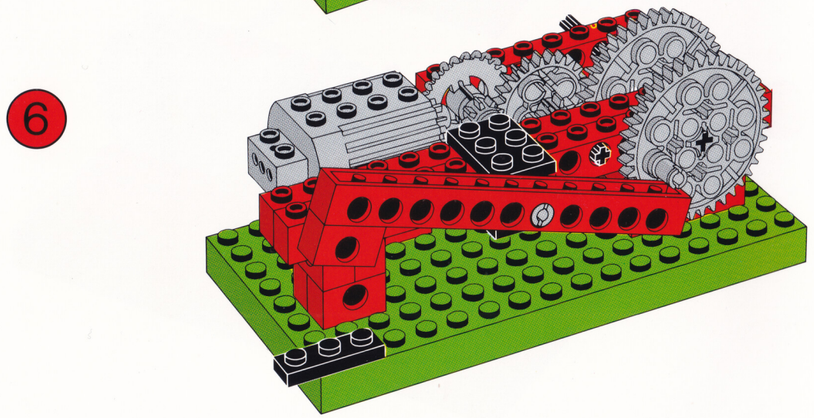

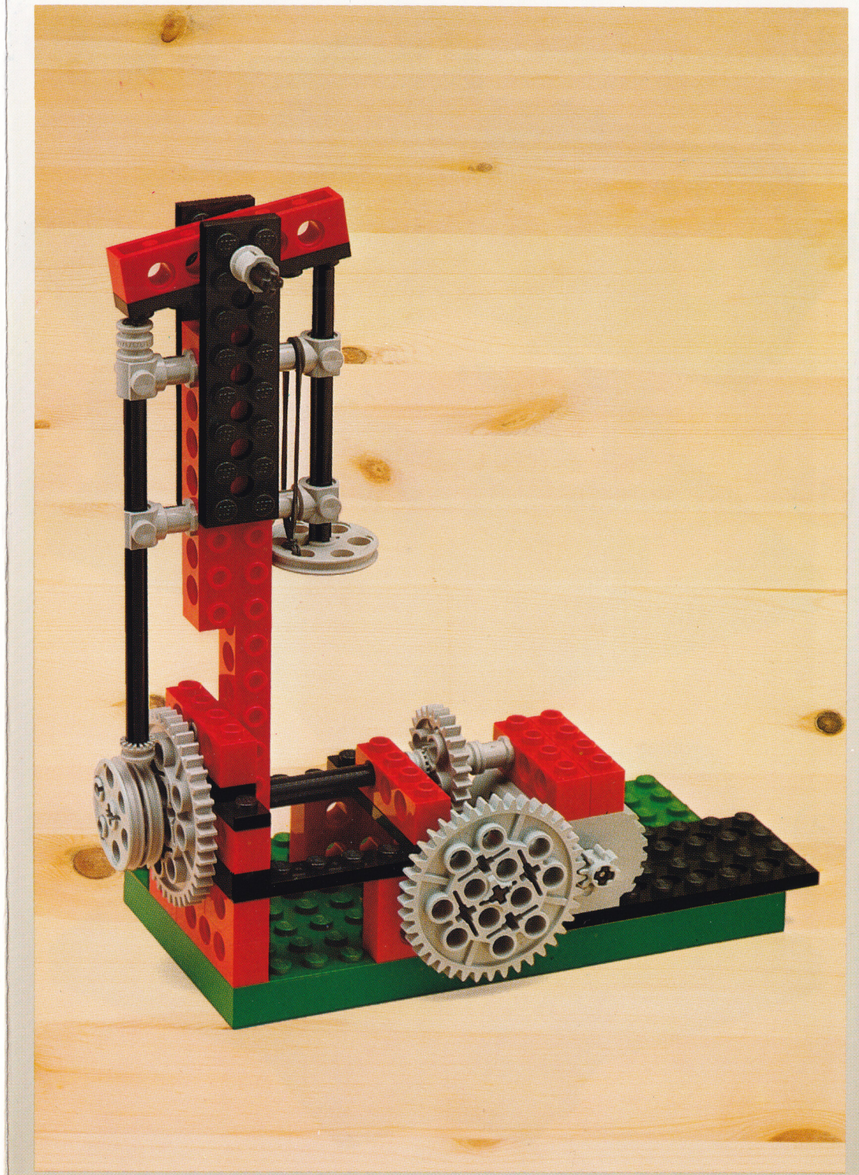

® LEGO and the LEGO Logo are registered trademarks. © 1985, 1990 LEGO Group.

PRINTED IN DENMARK BY LAURSEN-TØNDER

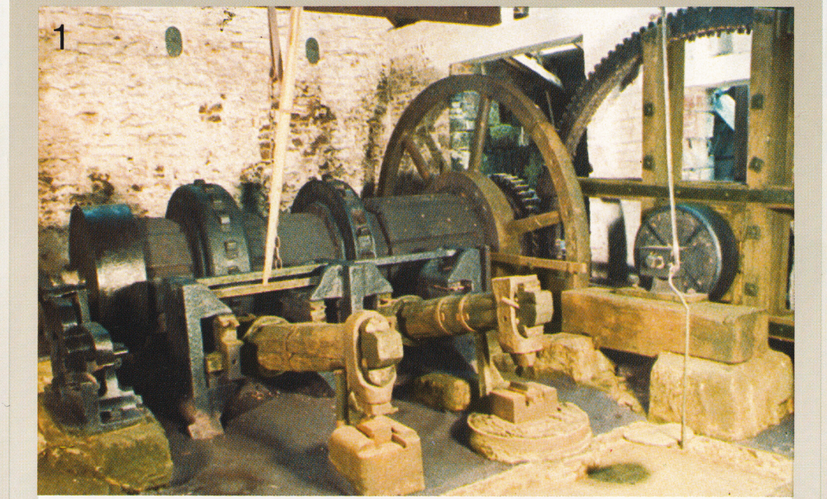

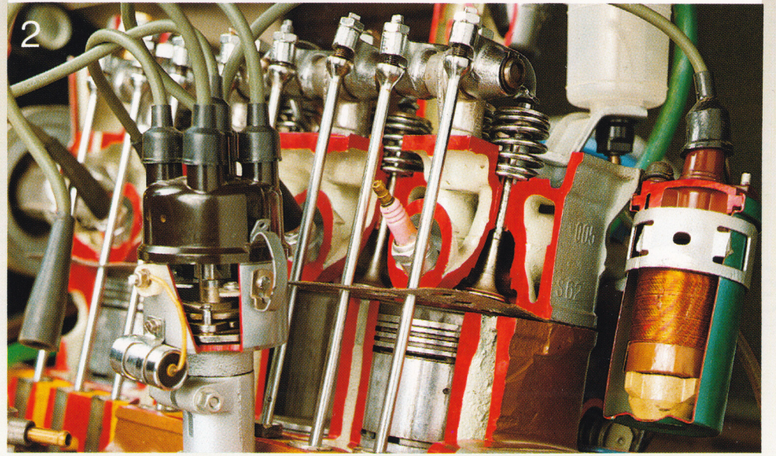

LEGO dacta Technic

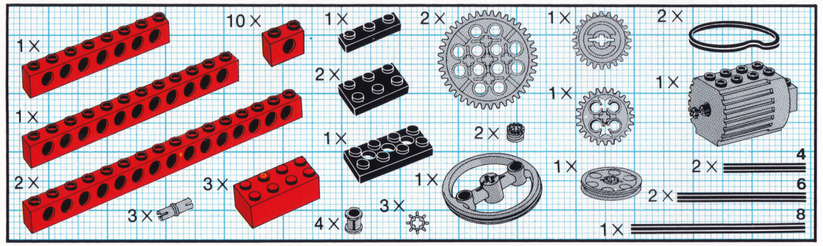

1

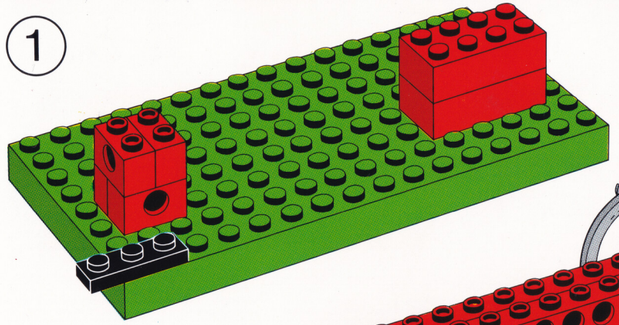

2

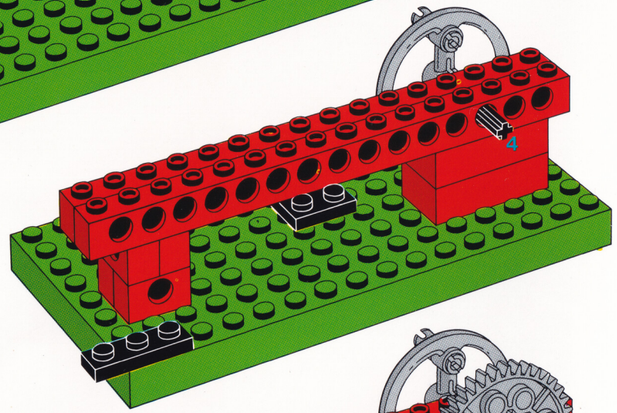

3

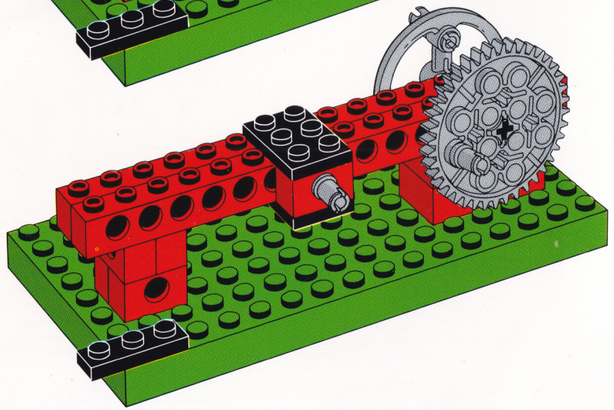

4

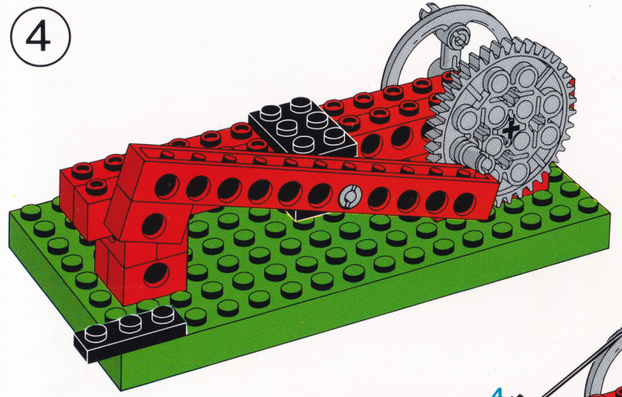

1

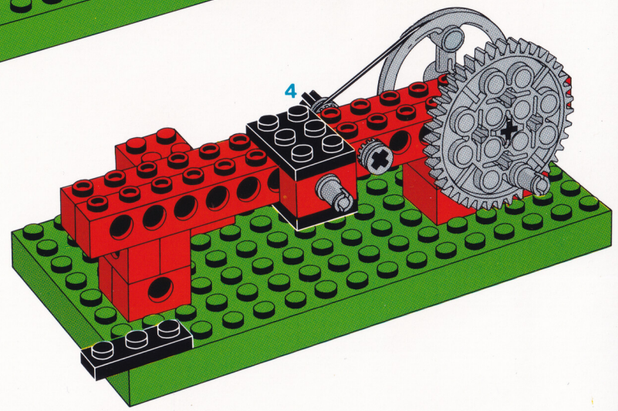

2

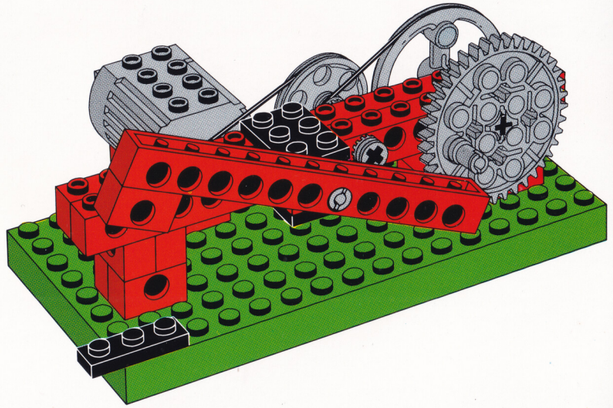

1

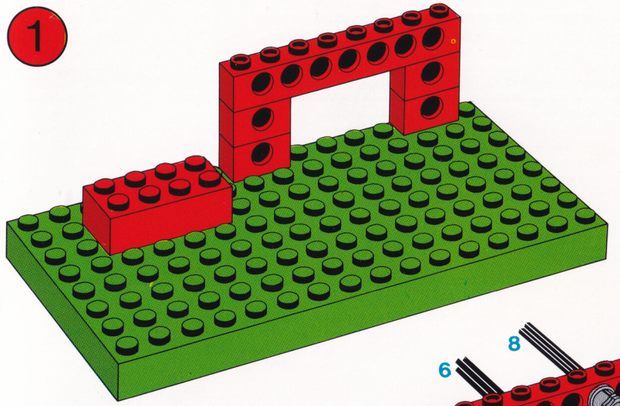

2

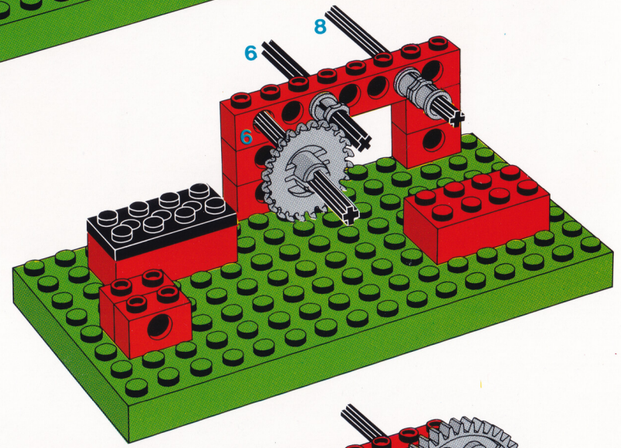

3

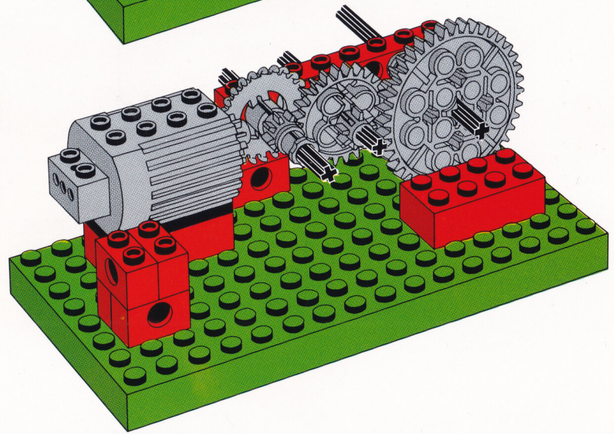

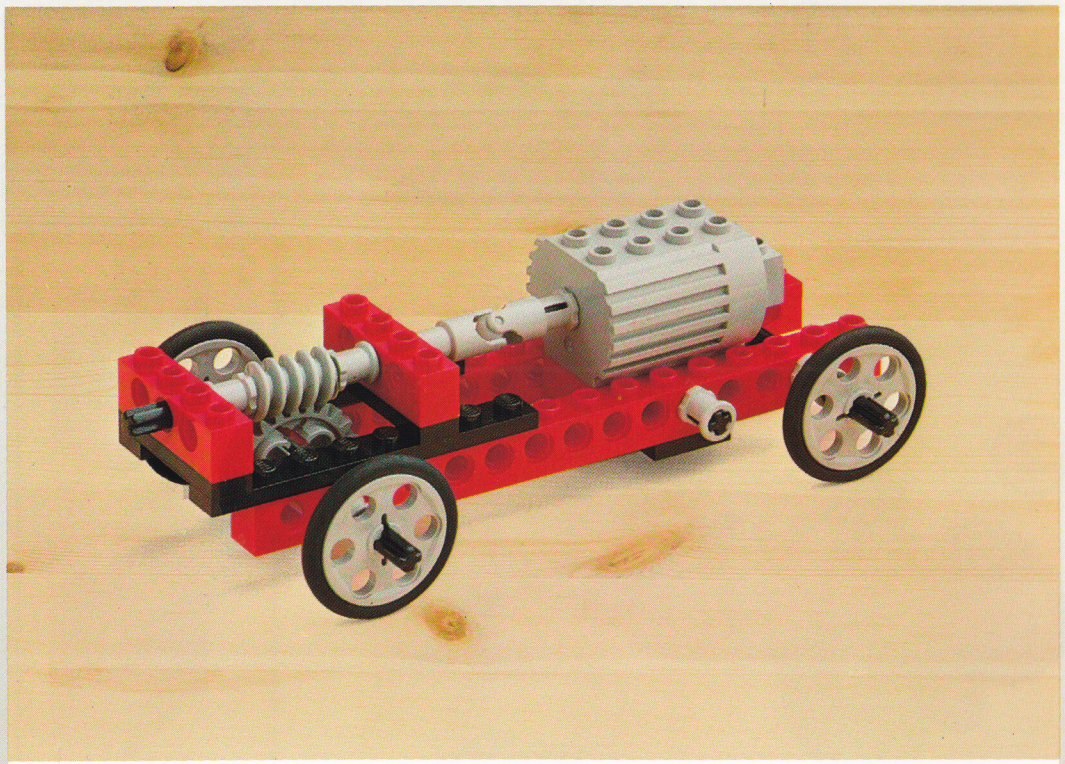

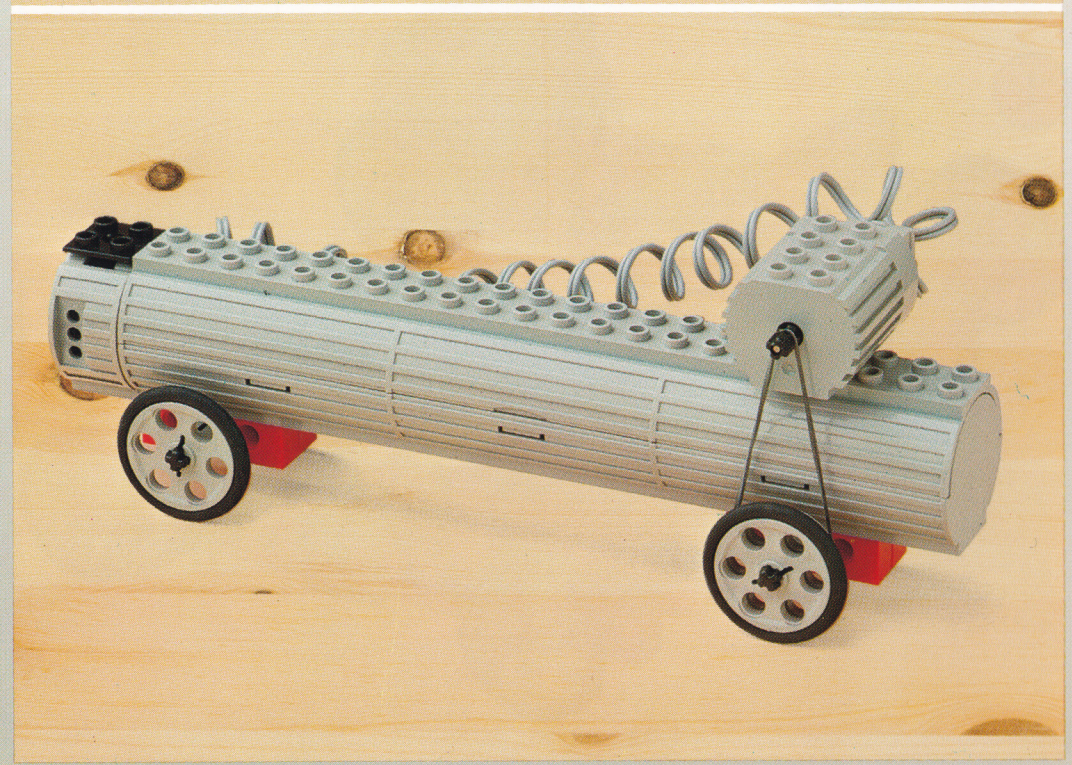

® LEGO and the LEGO Logo are registered trademarks. © 1985, 1990 LEGO Group.

PRINTED IN DENMARK BY ƒ LAURSEN-TØNDER





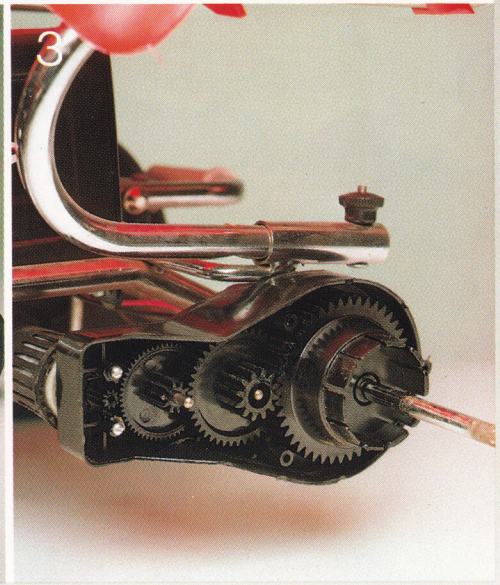

LEGO dacta

Technic

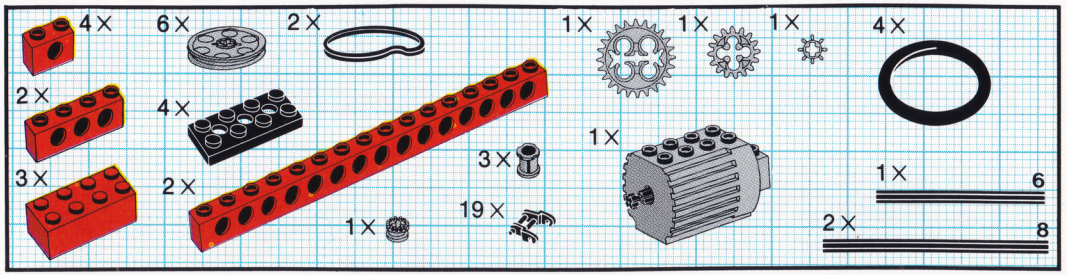
4X
6X
2X
1X
1X
1X
4X
2X
4X
3X
1X
2X
3X
19X
1X
6
2X
8

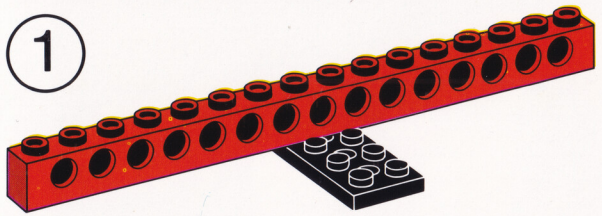
1

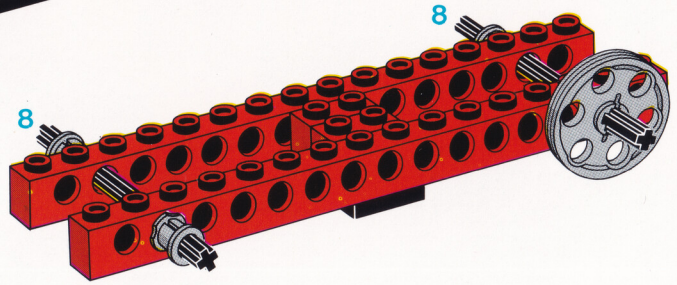
2
8
8

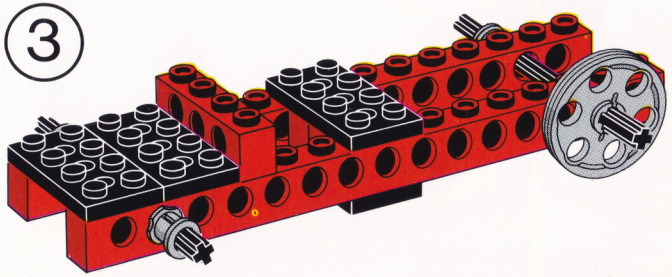
3

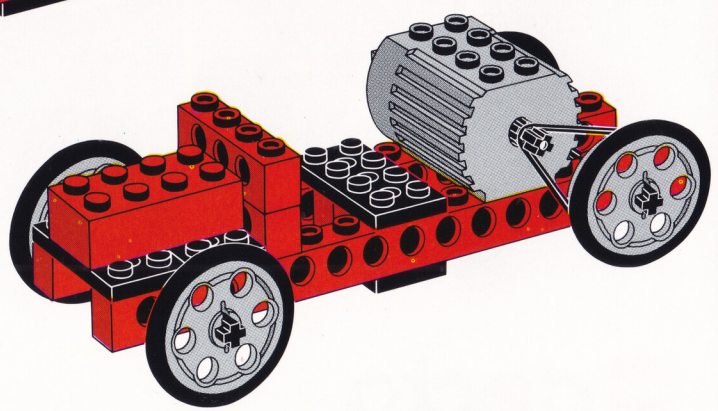
4

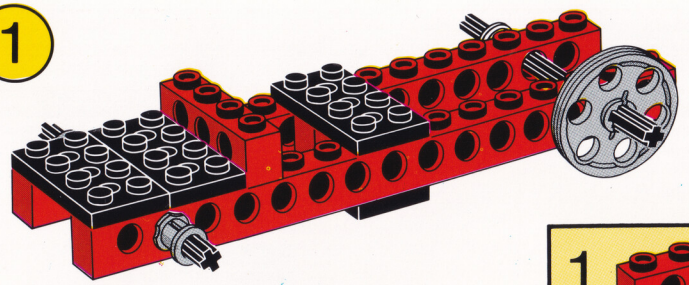
1

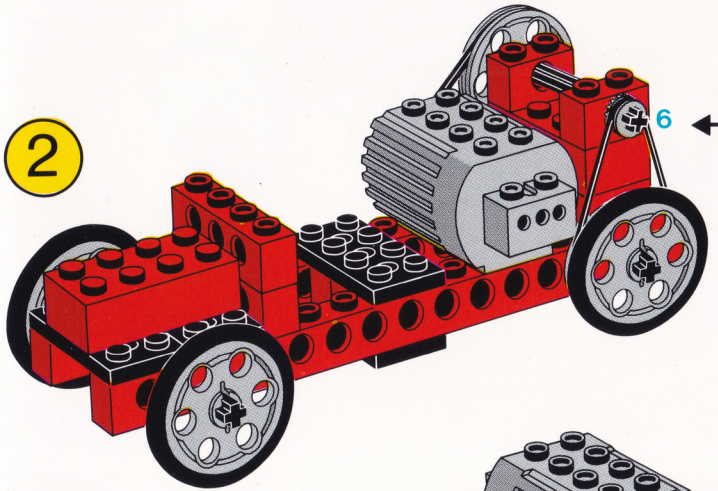
2
6

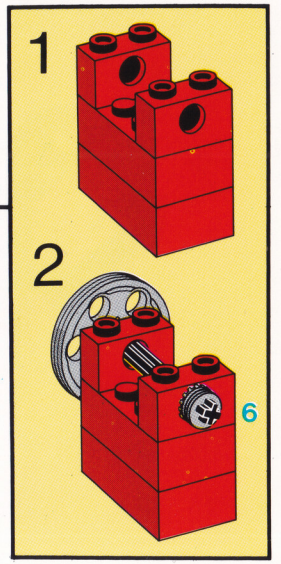
1
2
6

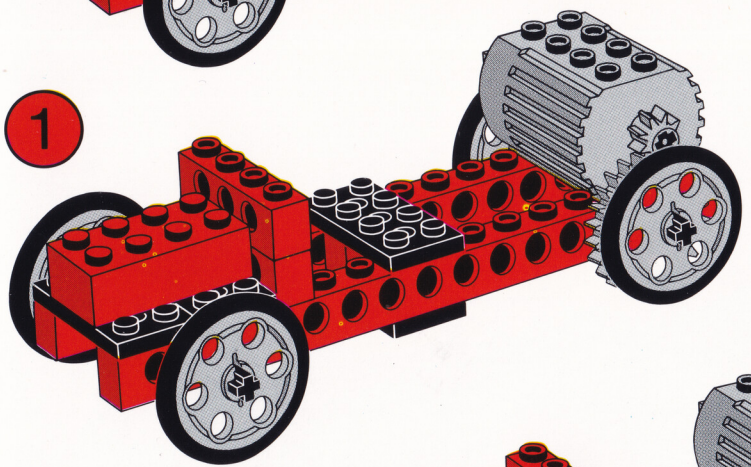
1

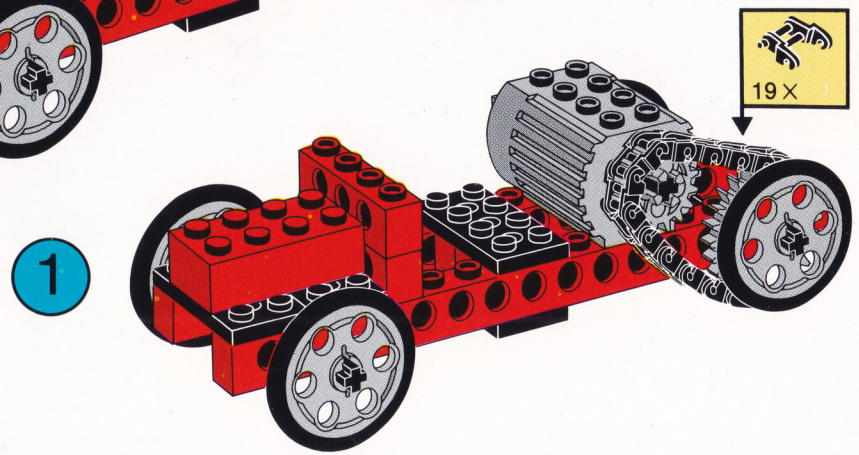
19X
1

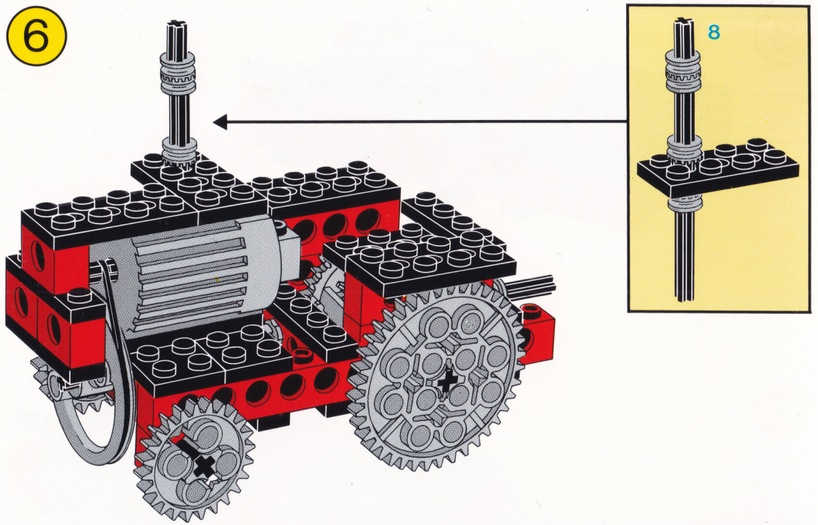

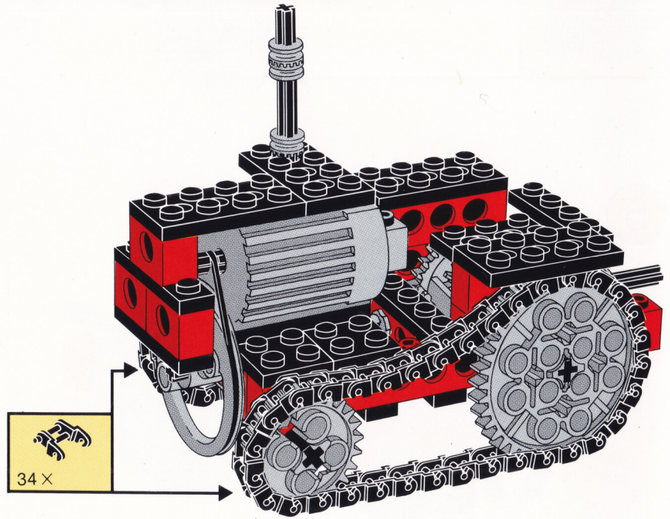

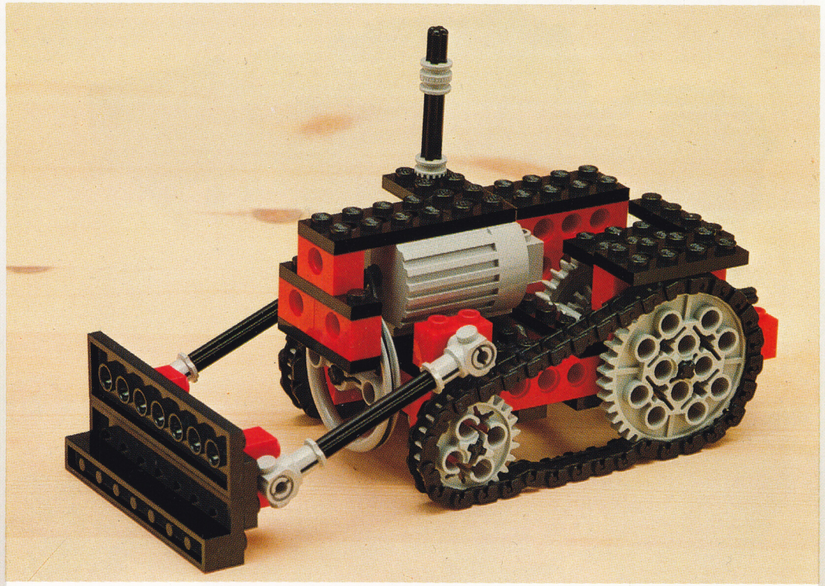

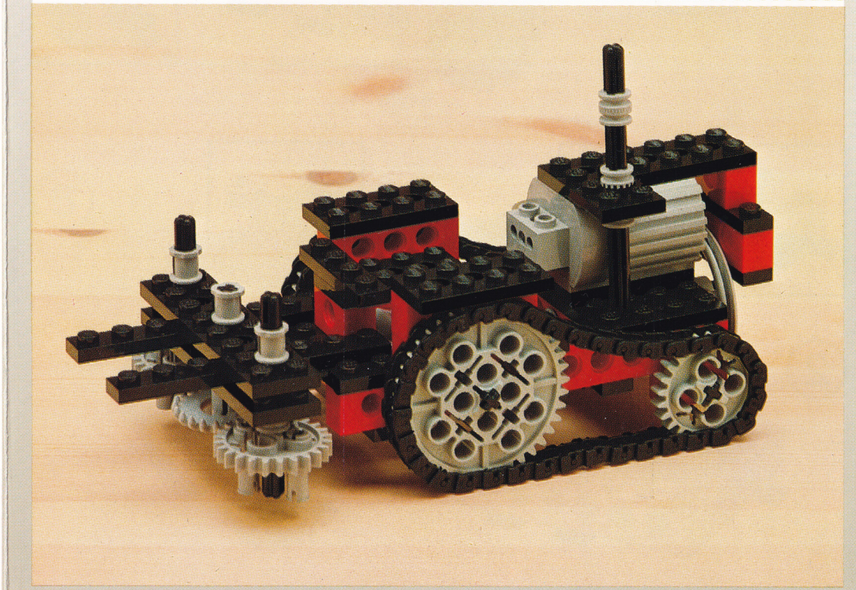

® LEGO and the LEGO Logo are registered trademarks. © 1985, 1990 LEGO Group.

PRINTED IN DENMARK BY ⨍ LAURSEN TØNDER

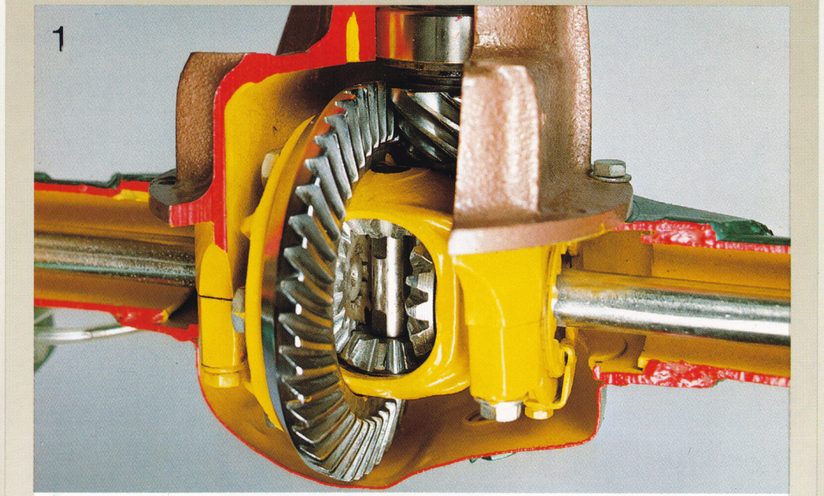



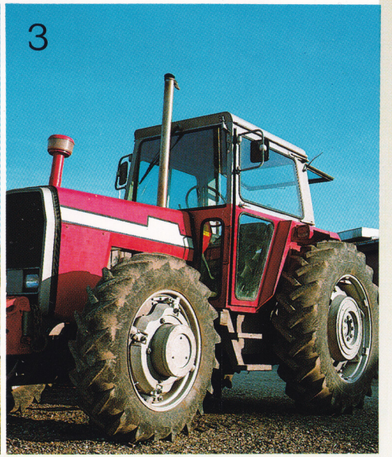

LEGO dacta Technic

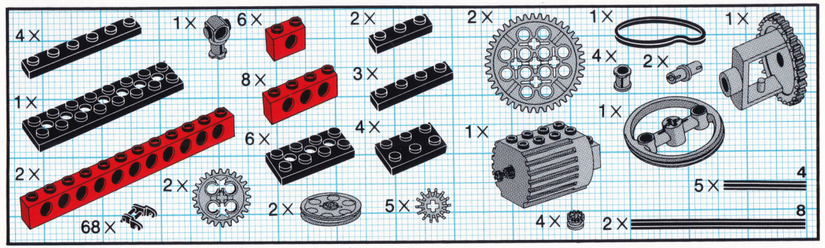

1

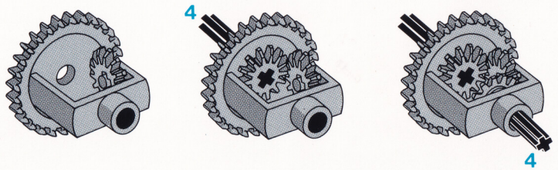

2

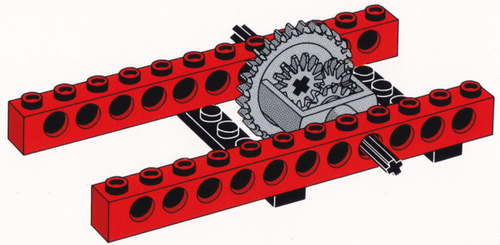

3

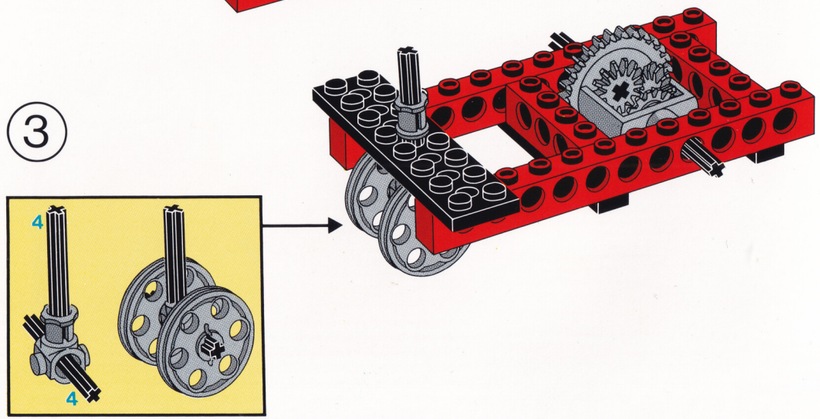

4

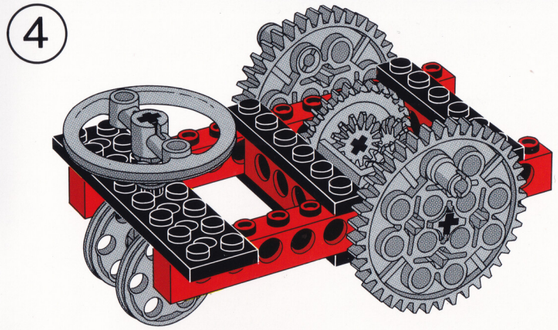

1

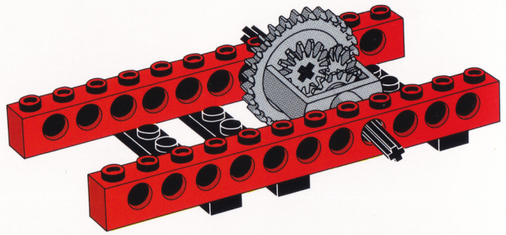

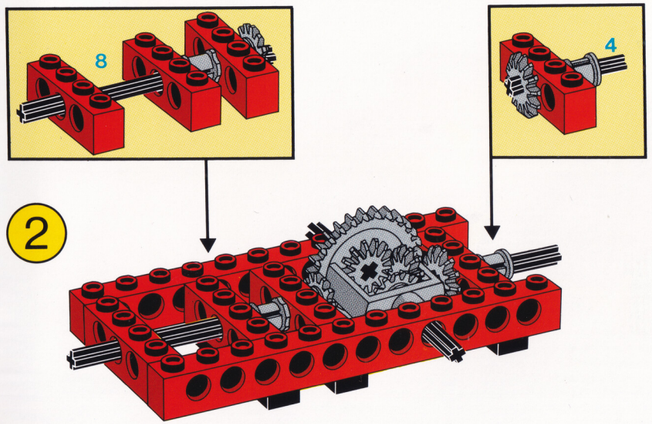

2

3

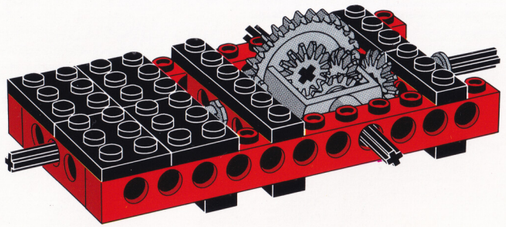

4

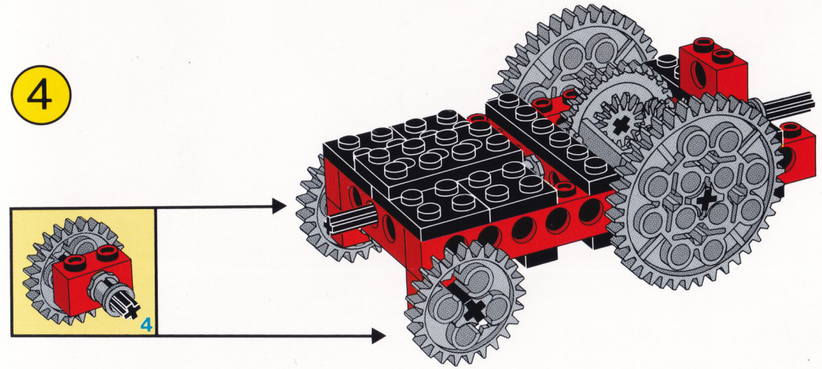

5

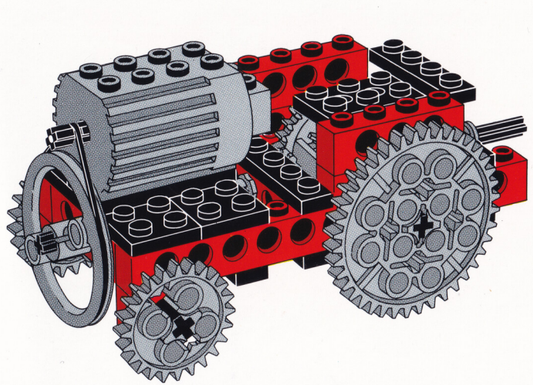

3

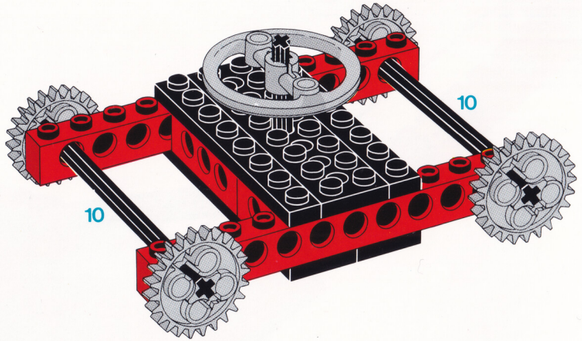

9

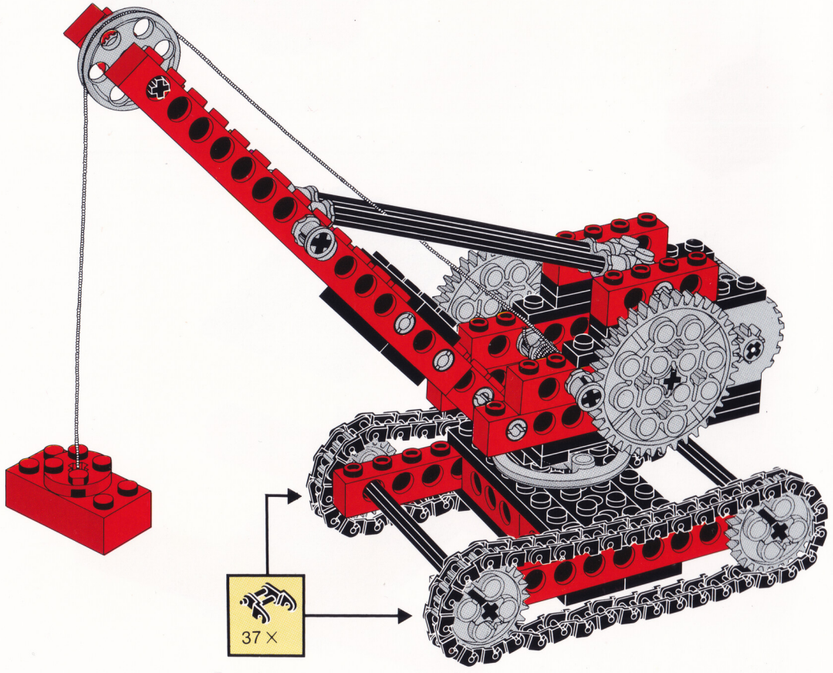

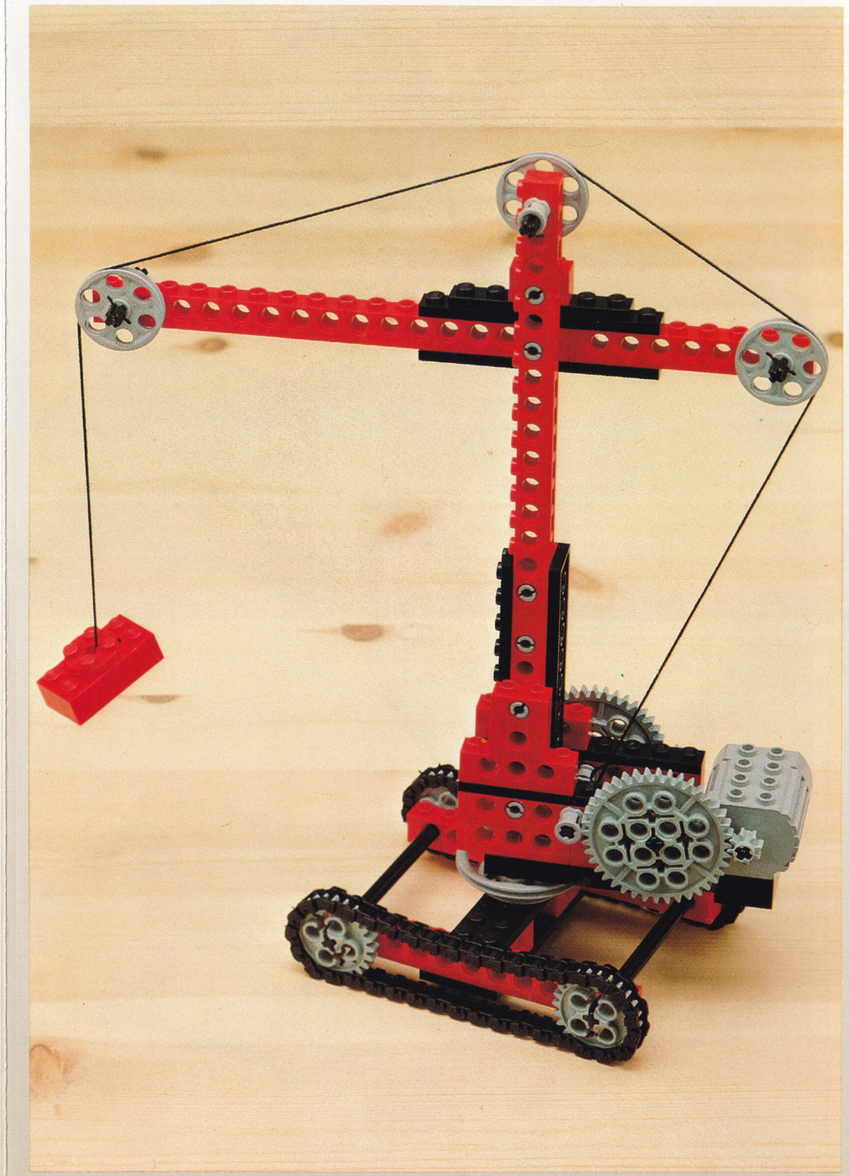

® LEGO and the LEGO Logo are registered trademarks. © 1985, 1990 LEGO Group.

PRINTED IN DENMARK BY LAURSEN TONDER







LEGO dacta Technic

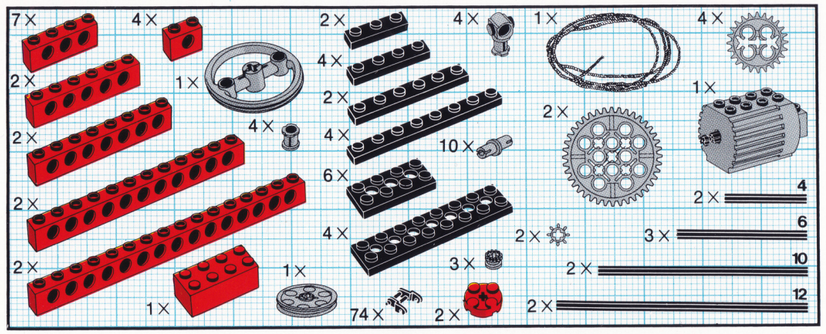

1

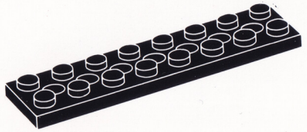

3

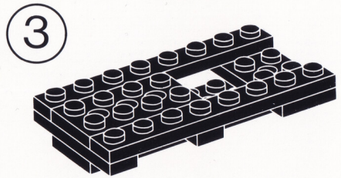

2

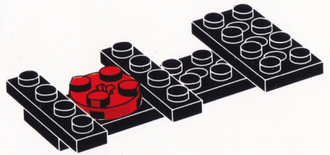

4

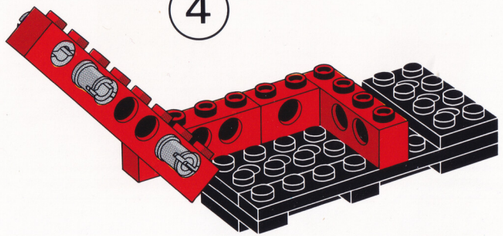

5

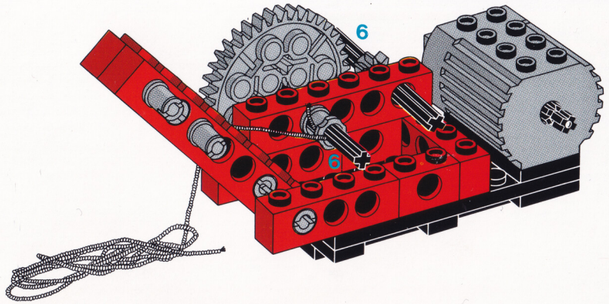

6

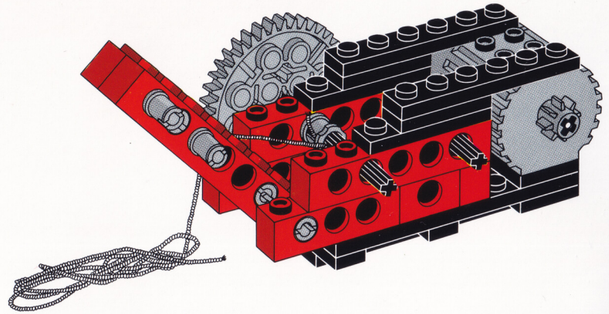

7

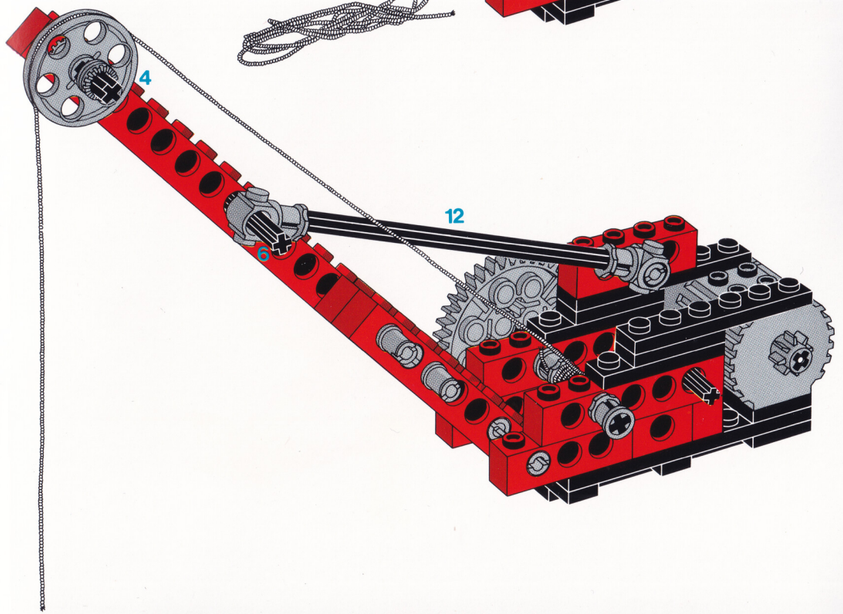

8

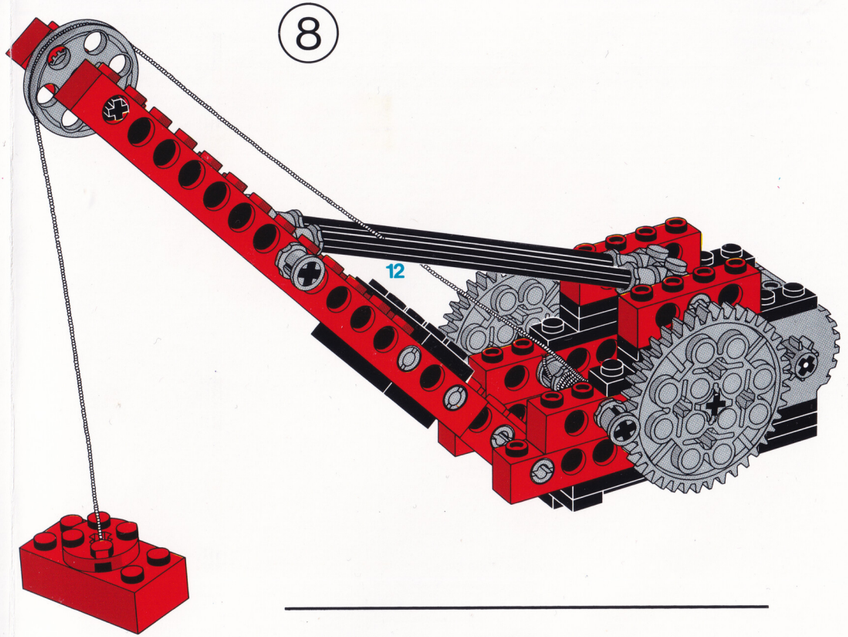

1



2

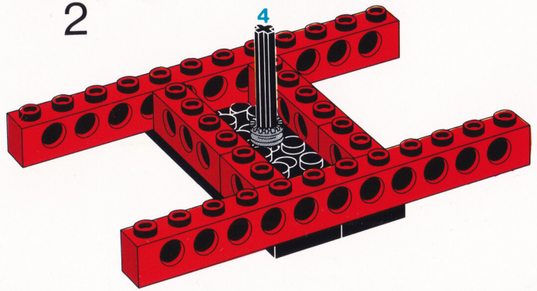

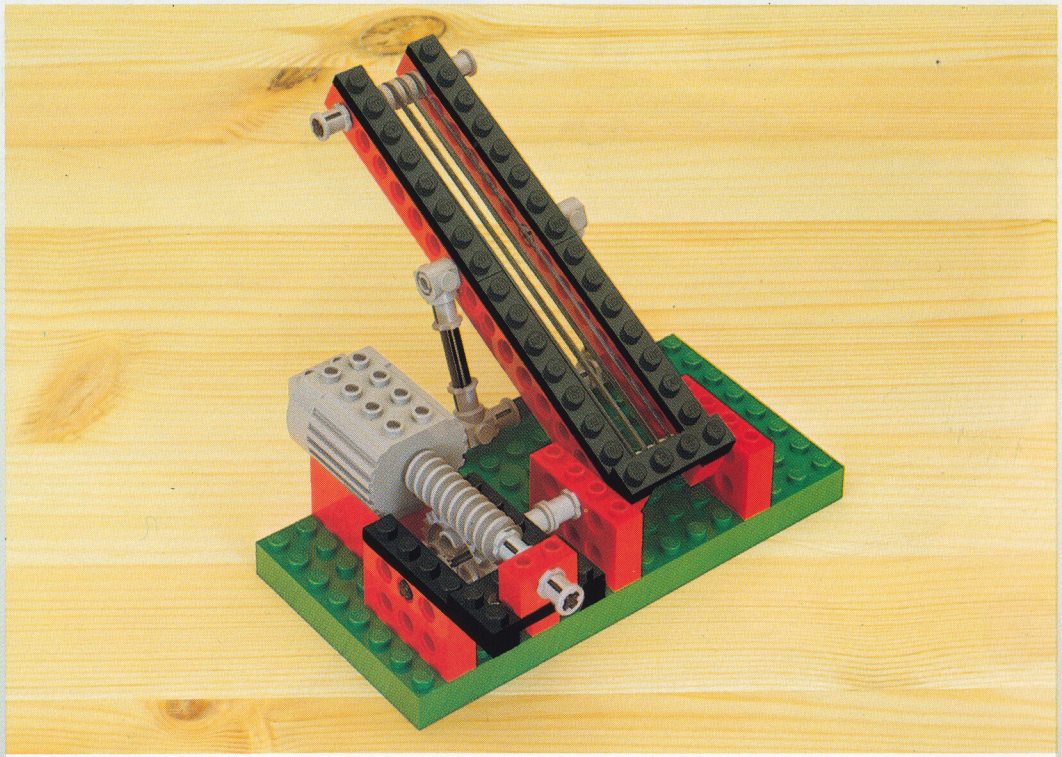

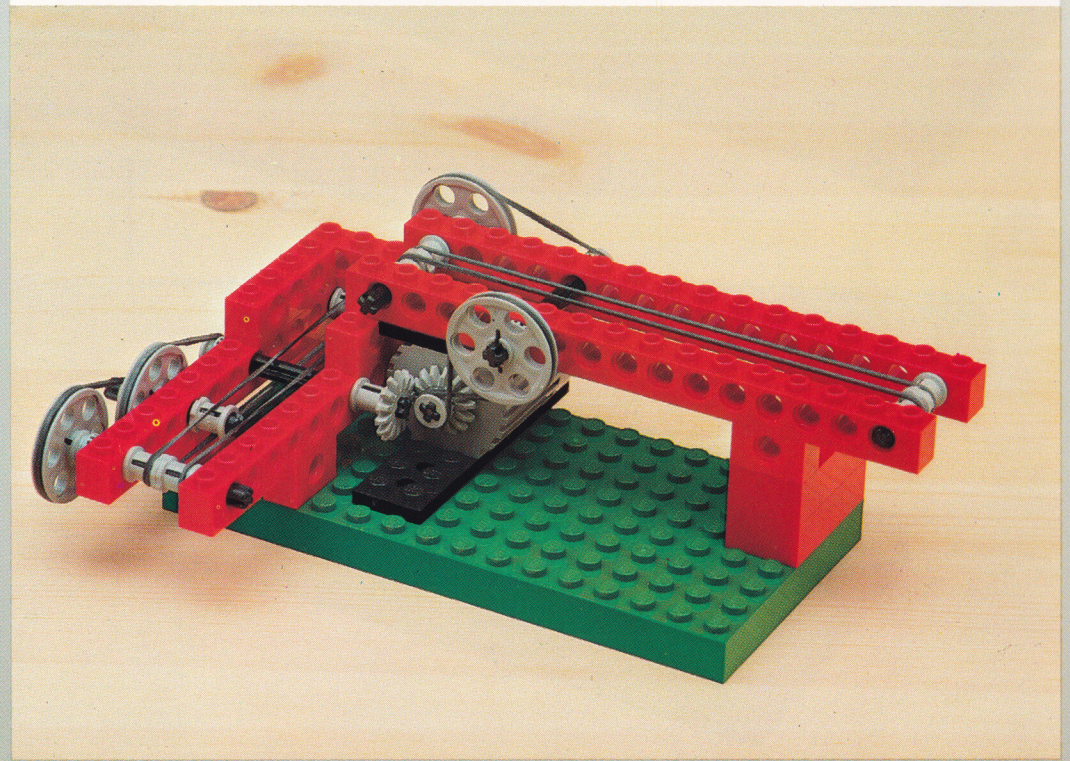

® LEGO and the LEGO Logo are registered trademarks. © 1985, 1990 LEGO Group.

PRINTED IN DENMARK BY ⅄ LAURSEN·TØNDER



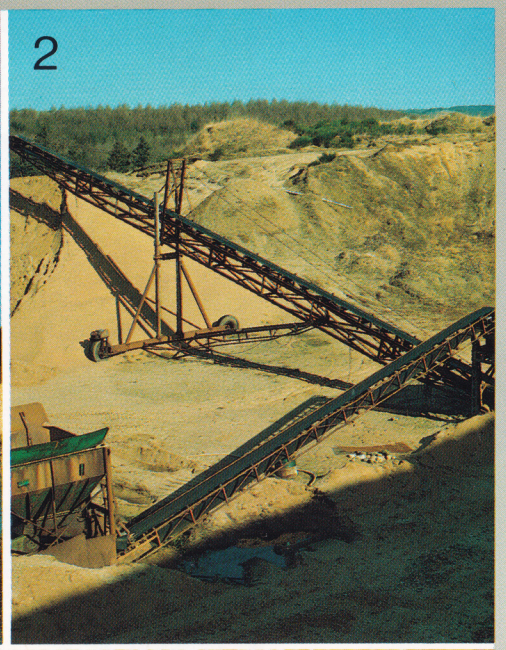





LEGO dacta

Technic

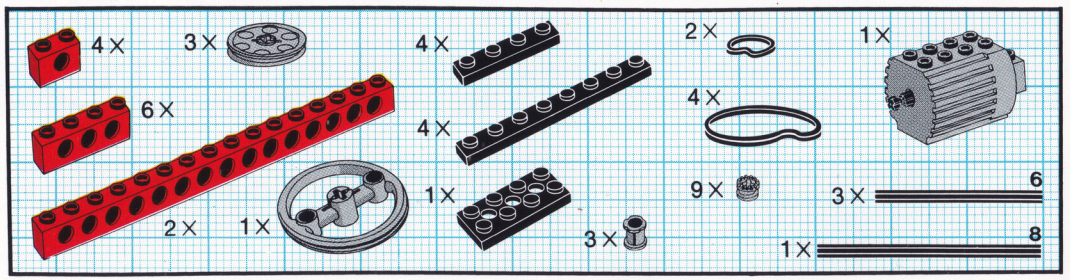
4 X
3 X
4 X
2 X
1 X
6 X
4 X
4 X
9 X
3 X
6
1 X
8
2 X
1 X
3 X

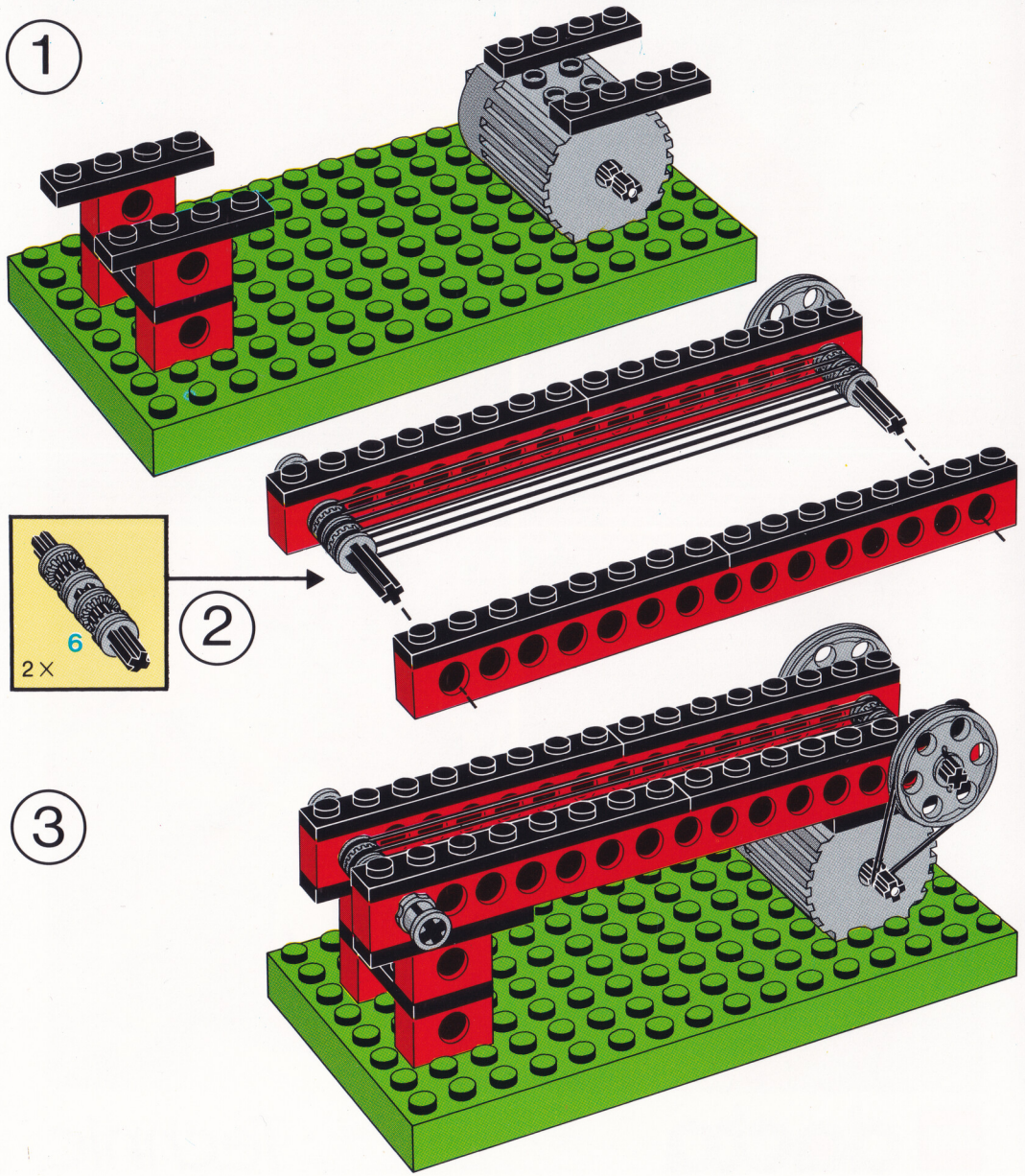
1
2
6
2 X
3

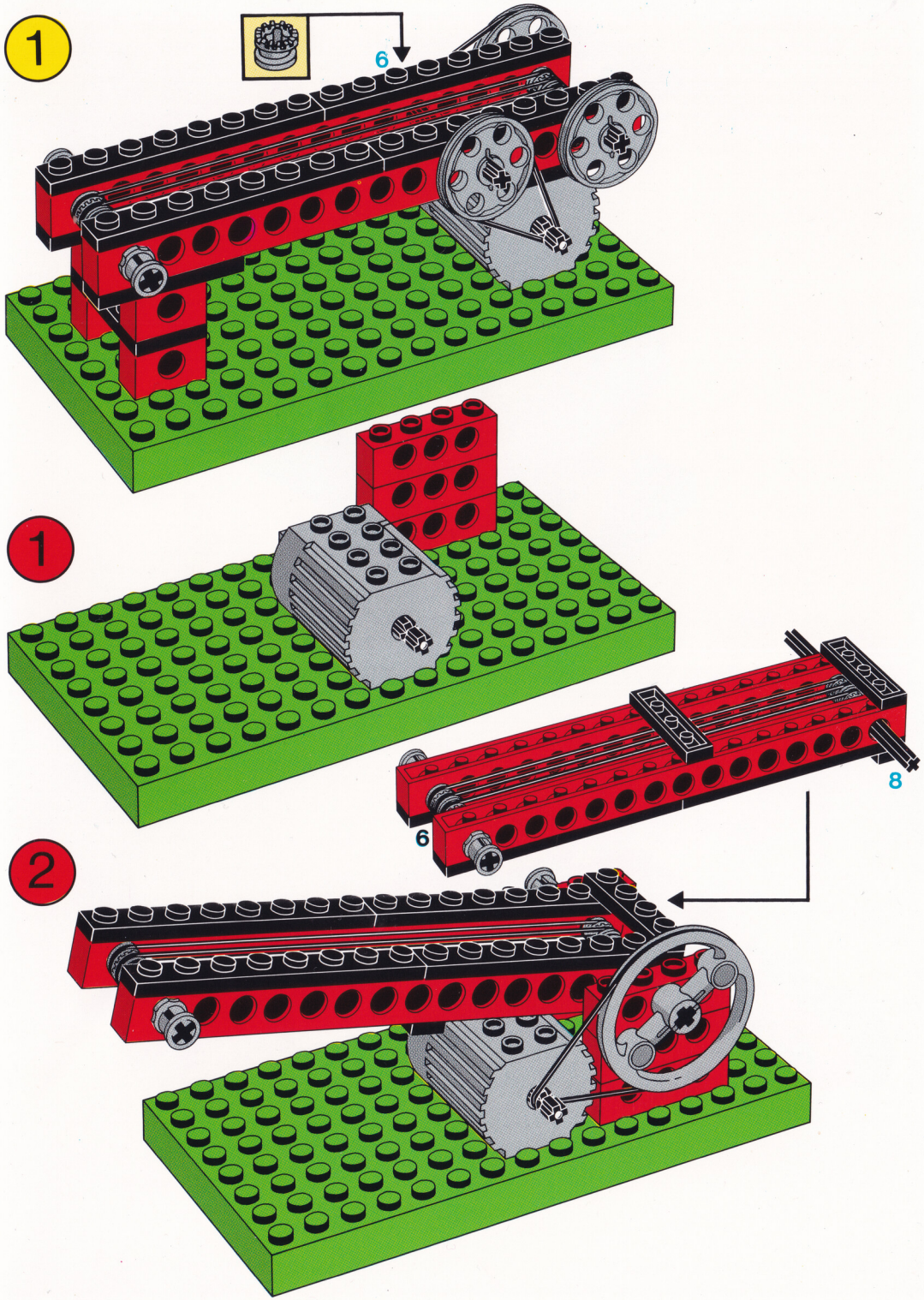
1
6
1
6
8
2

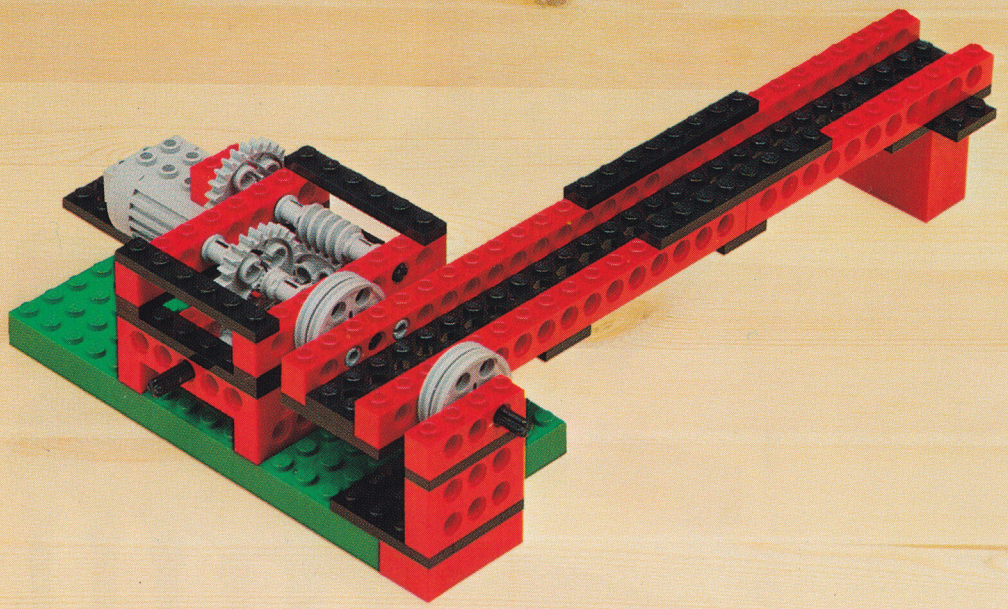

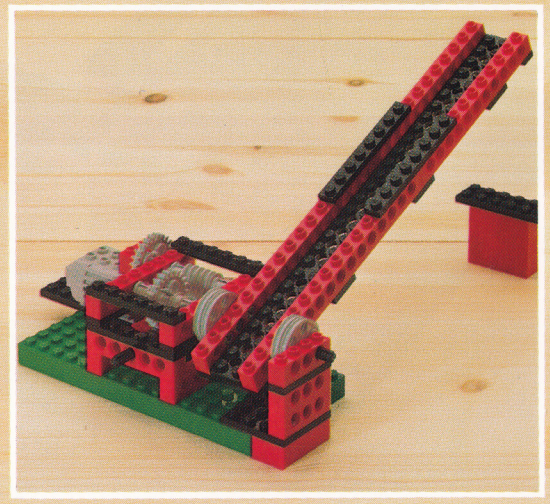

® LEGO and the LEGO Logo are registered trademarks. © 1985, 1990 LEGO Group.

PRINTED IN DENMARK BY LAURSEN-TØNDER

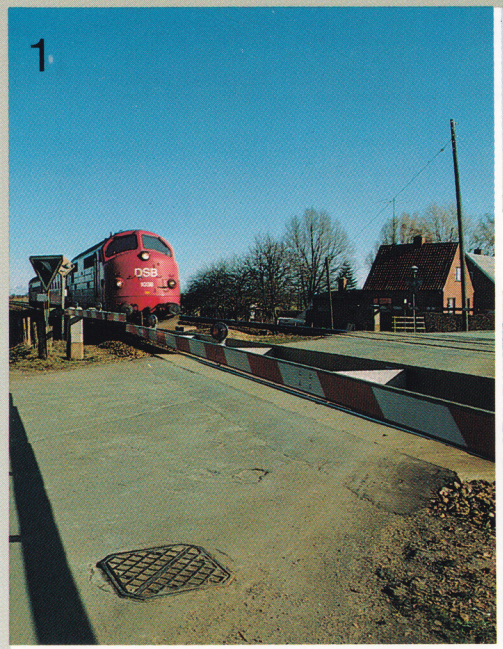





LEGO dacta Technic

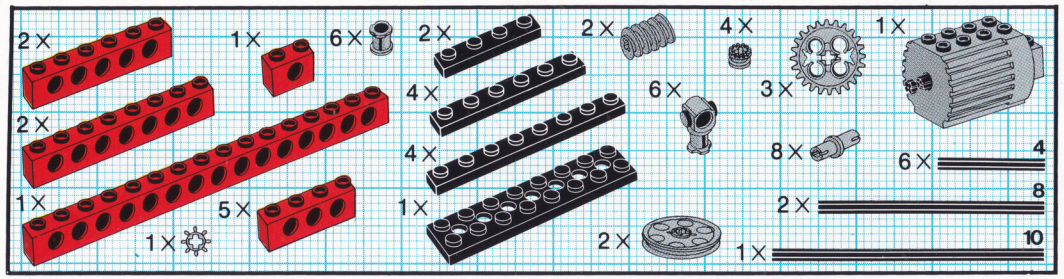
2 X
1 X
6 X
2 X
2 X
4 X
1 X
2 X
4 X
6 X
3 X
8 X
6 X 4
2 X 8
1 X 10
1 X
5 X
4 X
1 X
2 X

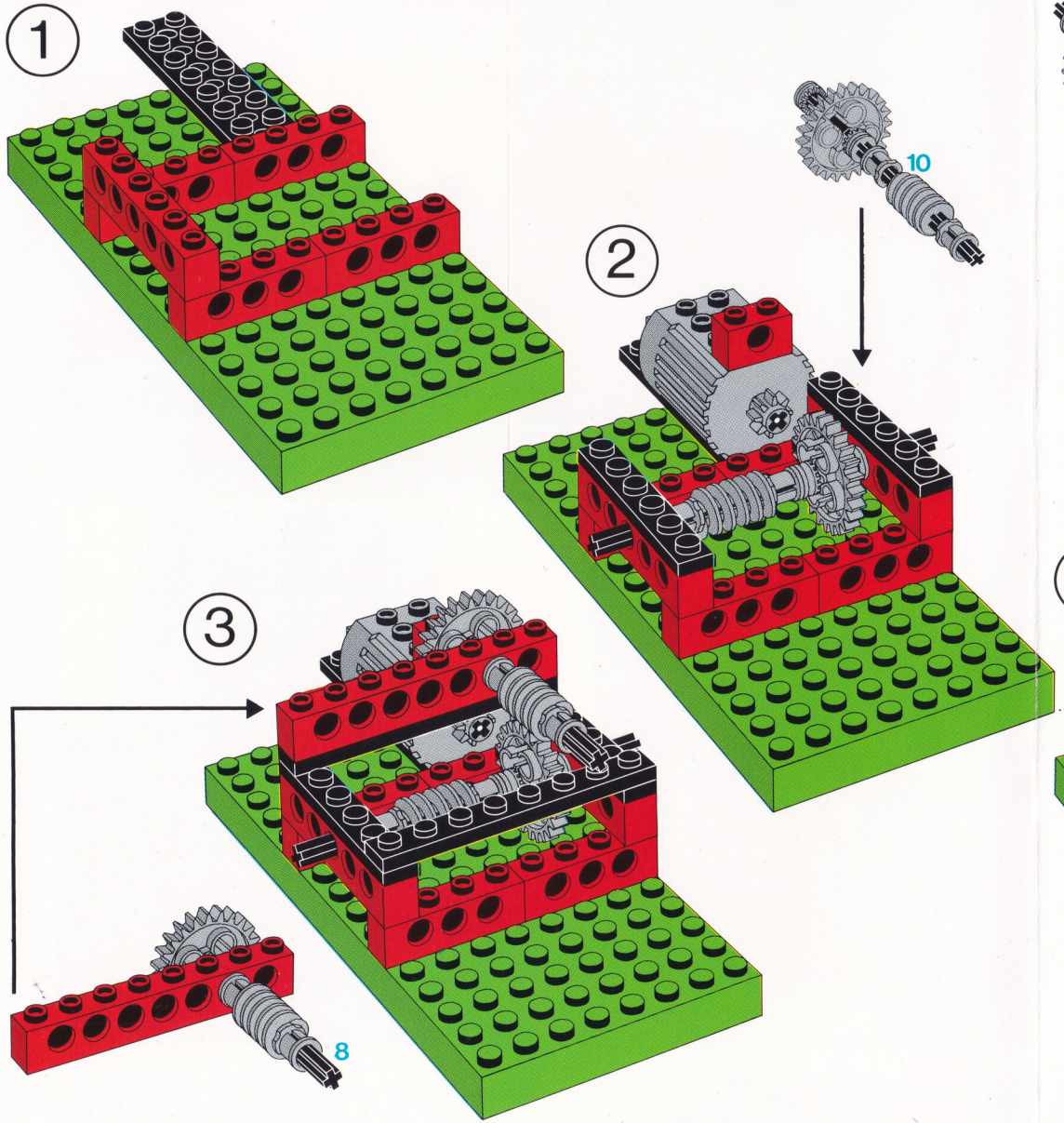
1
10
2
3
8

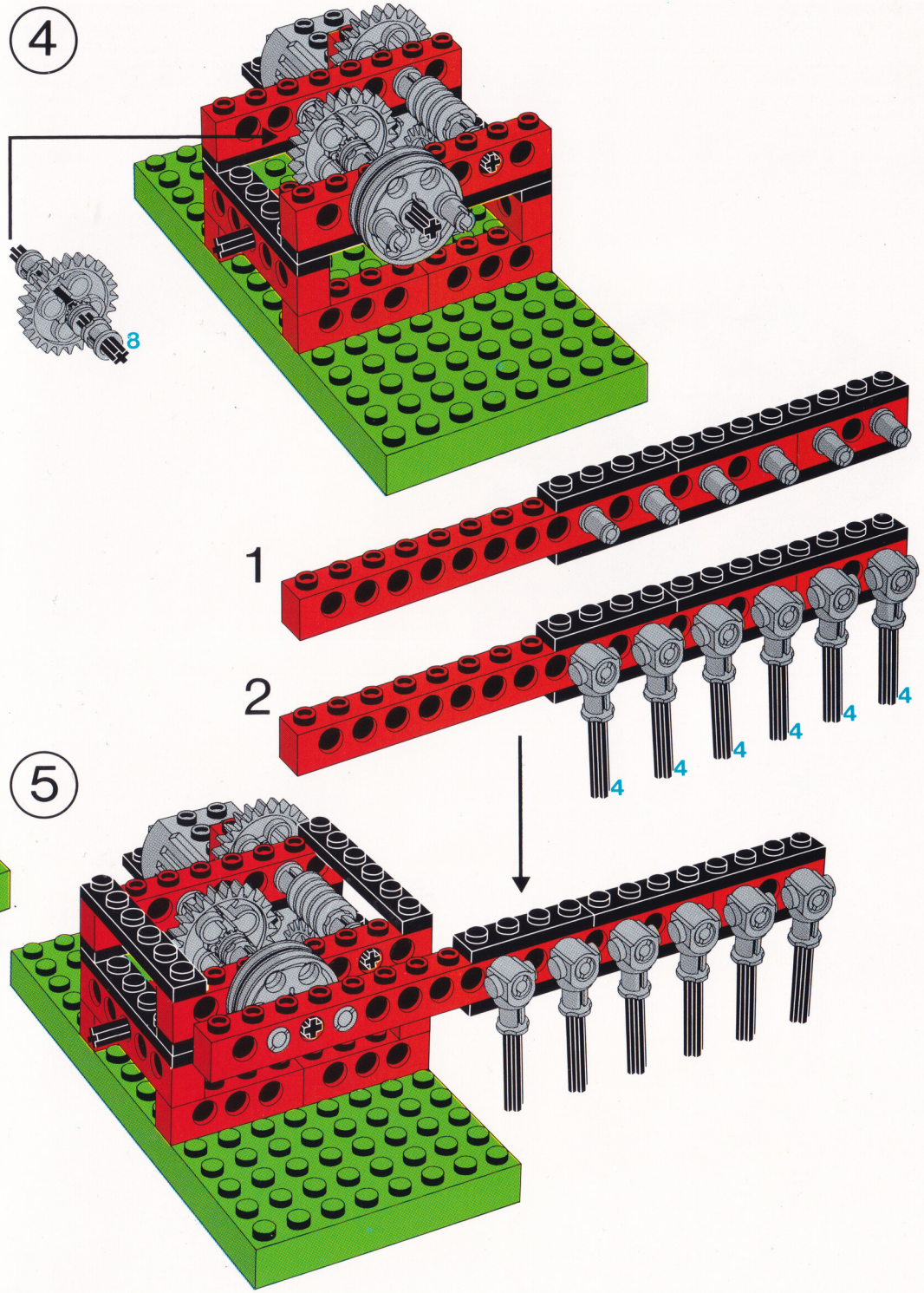
4
8
1
2
4
4
4
4
4
4
5

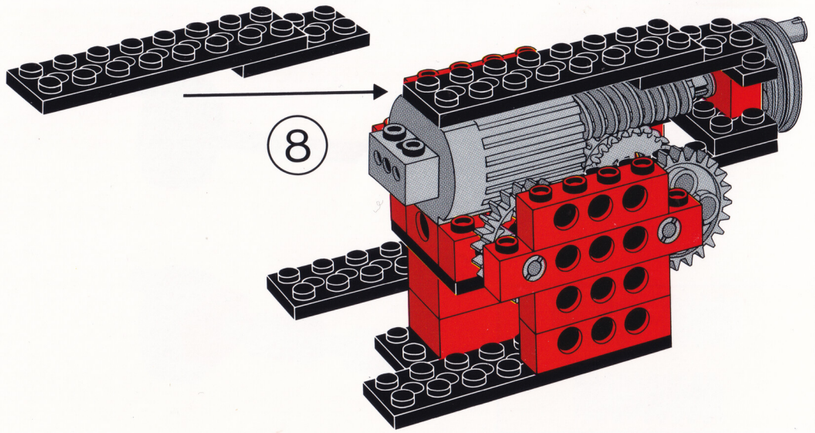

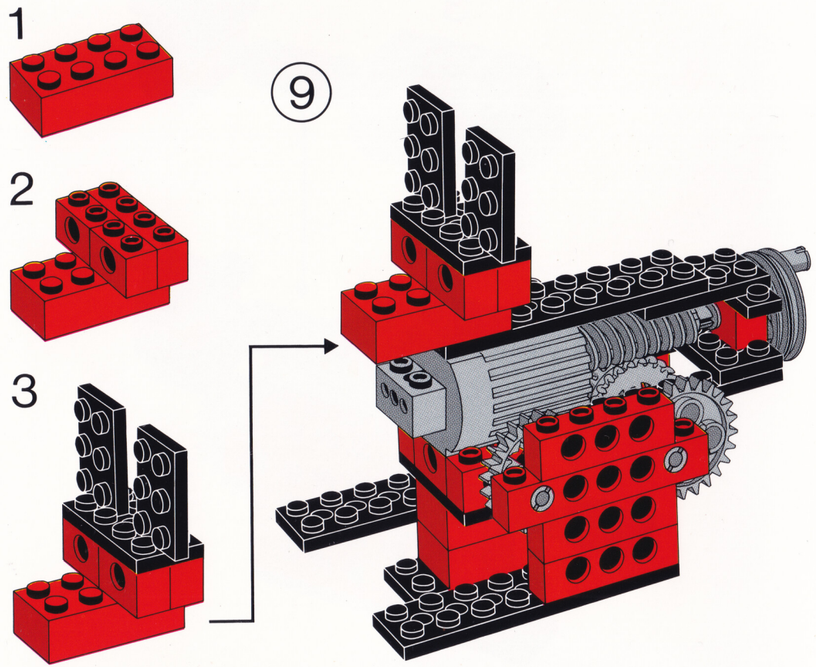

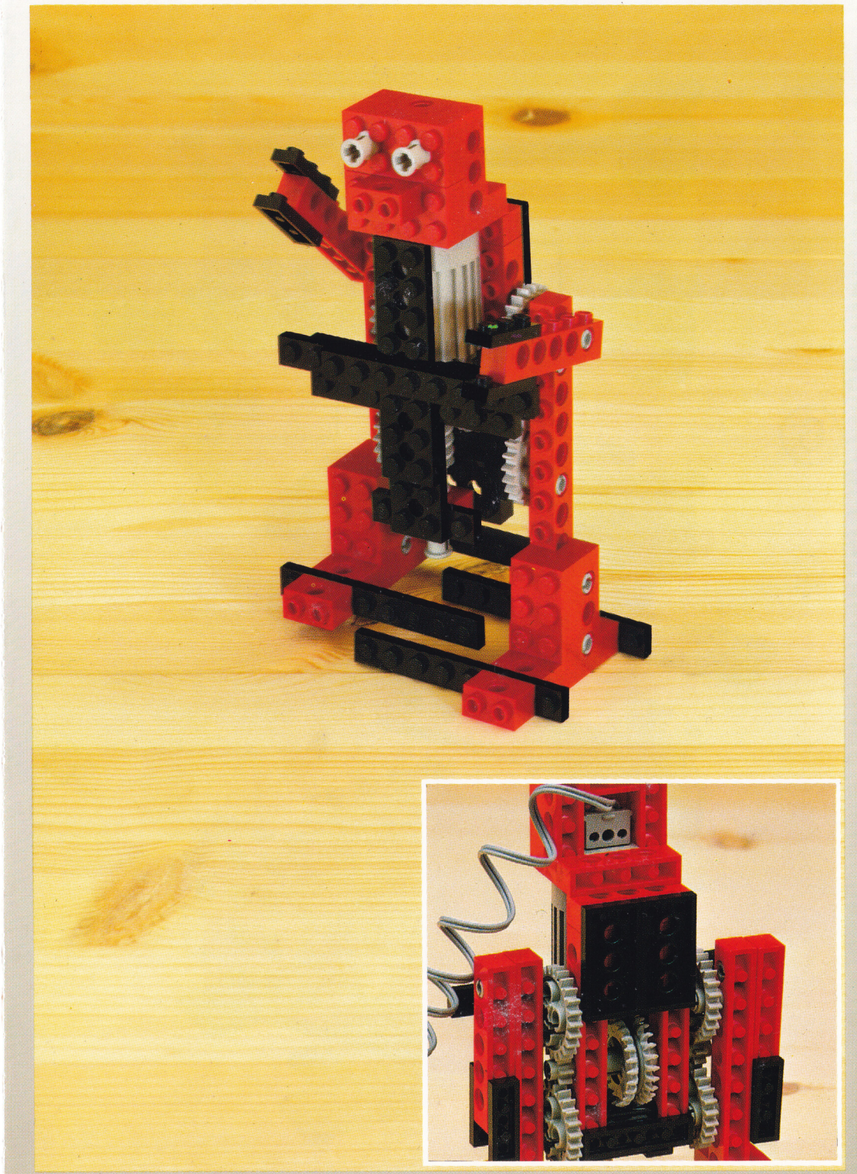

® LEGO and the LEGO Logo are registered trademarks. © 1985, 1990 LEGO Group.

PRINTED IN DENMARK BY ƒ LAURSEN TØNDER

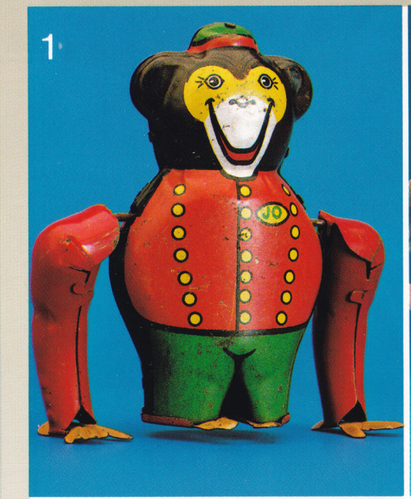



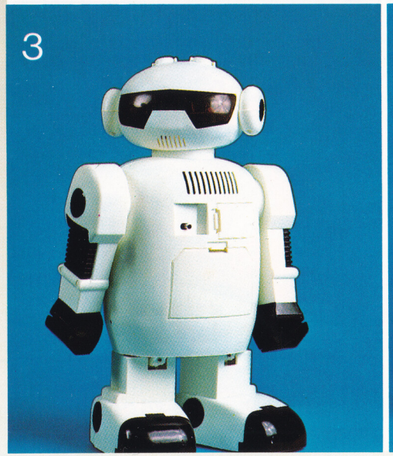

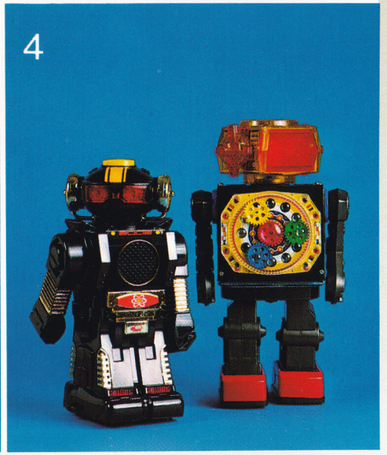

LEGO dacta

Technic

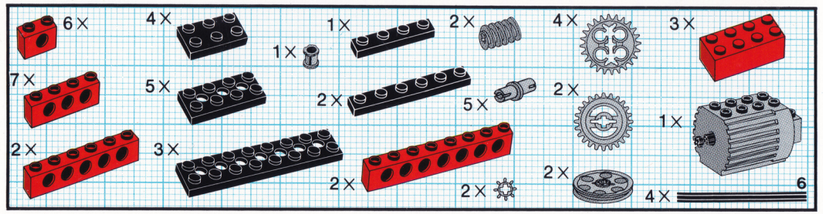
6×
4×
1×
2×
4×
3×
1×
7×
5×
2×
5×
2×
1×
2×
3×
2×
2×
2×
4×
6

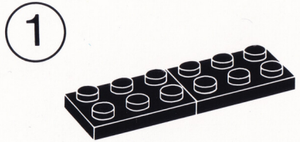
1

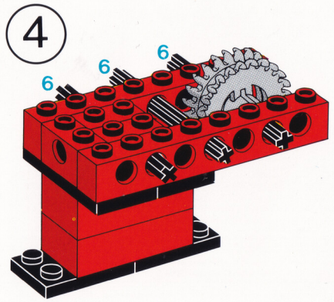
4
6
6
6

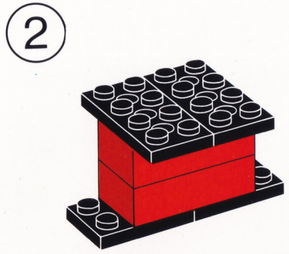
2

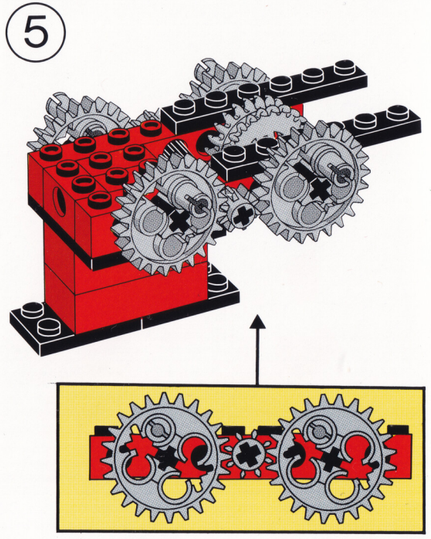
5

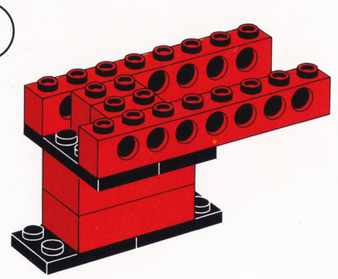
3

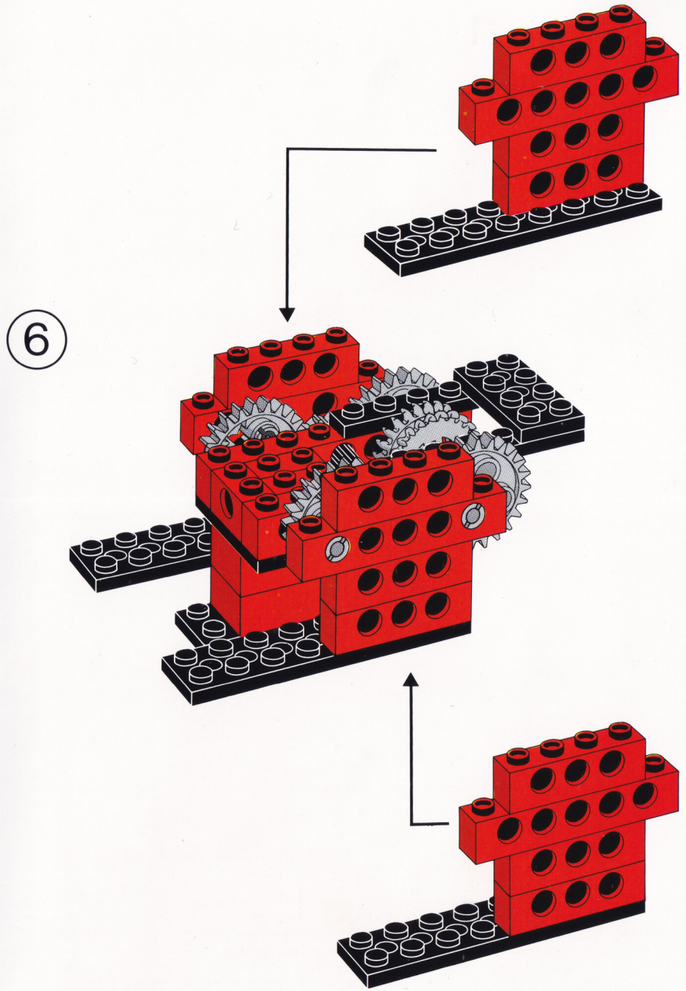
6

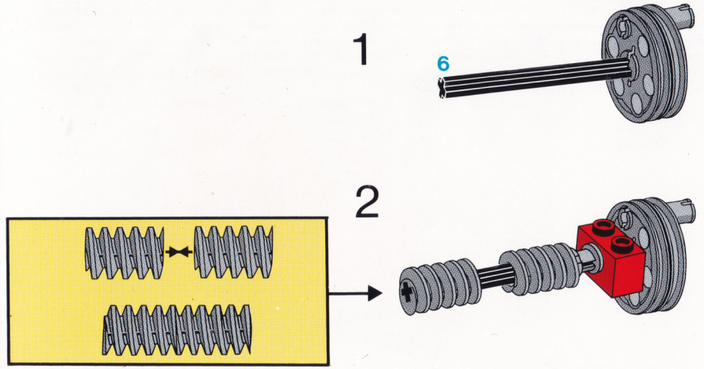
1
6
2

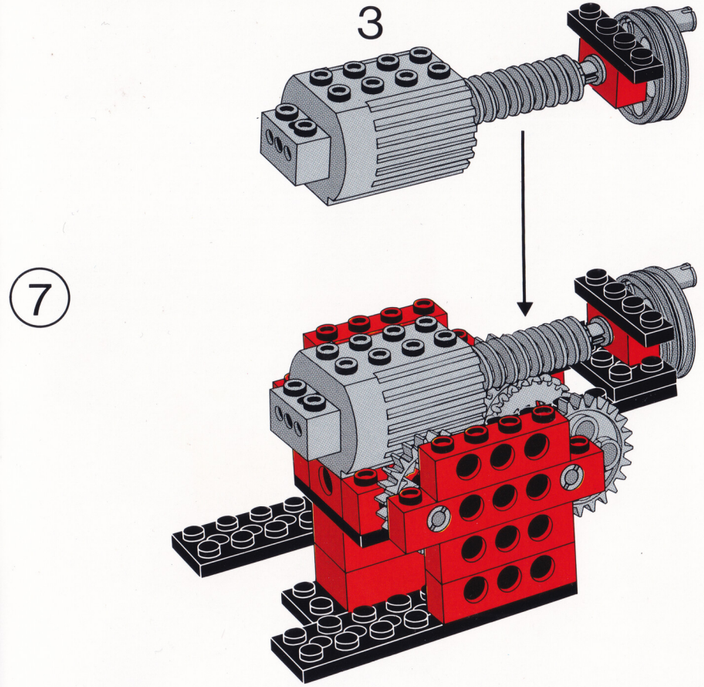
3
7